SELECTION/DIMENSIONS

USAF/SN D-Mount Adapter System

1. **Saves time removing bearing from shaft!**
2. **Reduces the use of blue flame torches!**
3. **Increases uptime!**
4. **Lowers maintenance costs!**

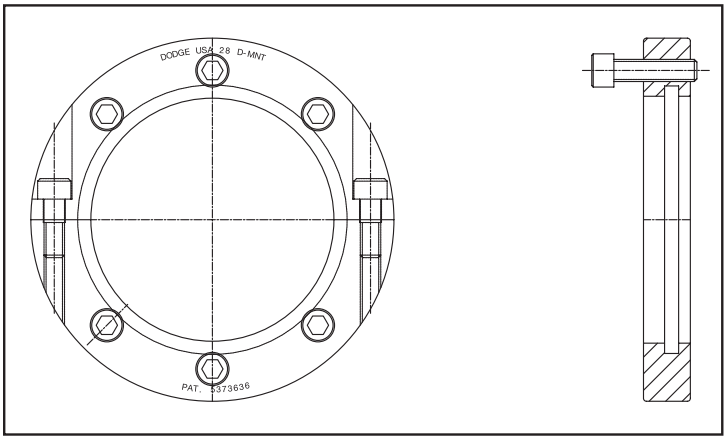

D-MOUNT TOOL

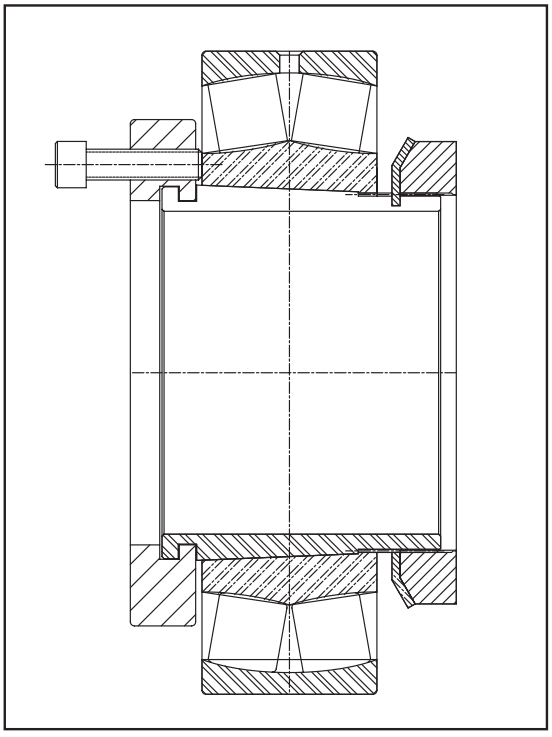

D-MOUNT TOOL - SNW - BEARING WITH TOOL ASSEMBLED READY TO REMOVE BEARING

For use on 22209K through 22244K size bearings

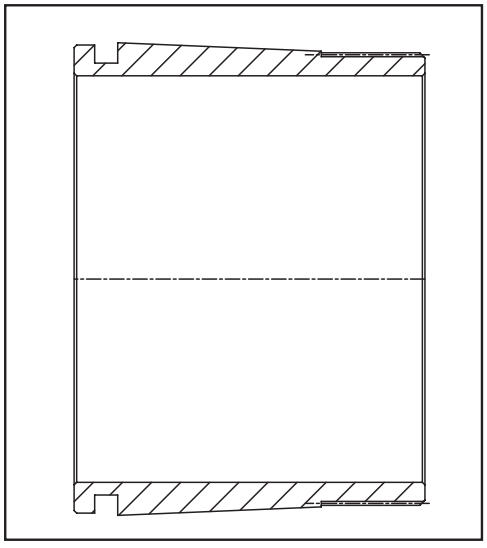

D-MOUNT ADAPTER SLEEVE

HOW IT WORKS

Split D-Mount tool is mounted on D-Mount adapter and uses socket head cap screws to force the inner ring off the taper to unlock the bearing from the adapter sleeve. No additional space allowance is required.

This adapter sleeve is used in place of the standard adapter sleeve.



D-MOUNT Adapter System SAF/SN Mounted Bearings

PART NUMBERS AND DESCRIPTION

Part No.	Description-Inch
D-Mount Adapter with Removal Feature-USAF500	
046960	DH09-SNW-107
046961	DH10-SNW-111
046962	DH11-SNW-115
046963	DH13-SNW-203
046964	DH15-SNW-207
046965	DH15-SNW-208
046966	DH16-SNW-211
046967	DH1 6-SNW-212
046968	DH17-SNW-215
046969	DH17-SNW-300
046970	DH18-SNW-303
046971	DH20-SNW-307
046972	DH20-SNW-308
046973	DH22-SNW-315
046974	DH22-SNW-400
046975	DH24-SNW-403
046976	DH26-SNW-407
046977	DH26-SNW-408
046978	DH28-SNW-415
046979	DH28-SNW-500
046980	DH30-SNW-503
046981	DH32-SNW-507
046982	DH32-SNW-508
046983	DH34-SNW-515
046984	DH34-SNW-600
046985	DH36-SNW-607
046986	DH36-SNW-608
046987	DH38-SNW-615
046988	DH38-SNW-700
046989	DH40-SNW-703
046991	DH44-SNW-708
046992	DH44-SNW-715
046993	DH44-SNW-800

* Made to order.

Part No.	Description-Metric
D-Mount Adapter with Removal Feature-USN500	
047815 *	DH09-SNW-40M
047816 *	DH10-SNW-45M
047817 *	DH11-SNW-50M
047818 *	DH12-SNW-55M
047819 *	DH13-SNW-60M
047820 *	DH15-SNW-65M
047821 *	DH16-SNW-70M
047822 *	DH17-SNW-75M
047823 *	DH18-SNW-80M
047824 *	DH19-SNW-85M
047825 *	DH20-SNW-90M
047826 *	DH22-SNW-100M
047827 *	DH24-SNW-110M
047828 *	DH26-SNW-115M
047829 *	DH28-SNW-125M
047830 *	DH30-SNW-135M
047831 *	DH32-SNW-140M

Part No.	Description
D-Mount Adapter Removal Tools	
046872	D-MOUNT TOOL 09
046873	D-MOUNT TOOL 10
046874	D-MOUNT TOOL 11
046850	D-MOUNT TOOL 12
046875	D-MOUNT TOOL 13
046876	D-MOUNT TOOL 15
046877	D-MOUNT TOOL 16
046878	D-MOUNT TOOL 17
046879	D-MOUNT TOOL 18
046851	D-MOUNT TOOL 19
046880	D-MOUNT TOOL 20
046881	D-MOUNT TOOL 22
046882	D-MOUNT TOOL 24
046883	D-MOUNT TOOL 26
046884	D-MOUNT TOOL 28
046885	D-MOUNT TOOL 30
046886	D-MOUNT TOOL 32
046887	D-MOUNT TOOL 34
046891	D-MOUNT TOOL 36
046892	D-MOUNT TOOL 38
046893	D-MOUNT TOOL 40
046894	D-MOUNT TOOL 44

NOTE: The D-MOUNT Adapter Sleeve SNW Assembly should be used in place of the standard SNW assembly during installation. The D-MOUNT tool will be needed during removal.