SELECTION/DIMENSIONS

Setscrew VSC Ball Bearings
VSC INTERMEDIATE DUTY 4-BOLT FLANGE BEARINGS

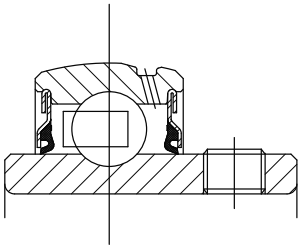

Lube Fitting Thread Size:
203 - 204 series - 1/4-28 tapered thread
207 - 207 series - 1/8-27 NPT

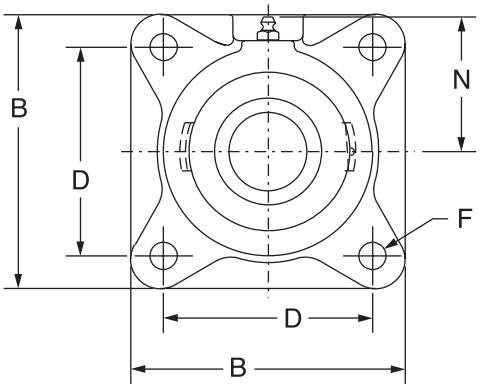

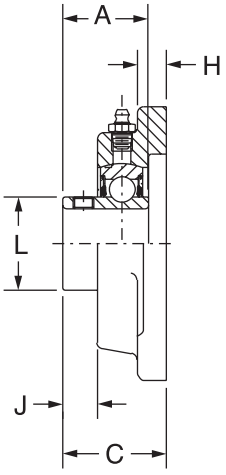

Series	Shaft Size	Standard		No-Lube/Sealed for Life (-NL)	
		Part No.	Description	Part No.	Description
203	1/2	**125524**	F4B-VSC-008	**@**	F4B-VSC-008-NL
	5/8	**125525**	F4B-VSC-010	**@**	F4B-VSC-010-NL
	17mm	***125694***	*F4B-VSC-17M*	**@**	*F4B-VSC-17MNL*
204	3/4	**123625**	F4B-VSC-012	**@**	F4B-VSC-012-NL
	20mm	***125695***	*F4B-VSC-20M*	**@**	*F4B-VSC-20M-NL*
205	7/8	**125526**	F4B-VSC-014	**@**	F4B-VSC-014-NL
	15/16	**125527**	F4B-VSC-015	**@**	F4B-VSC-015-NL
	1	**123626**	F4B-VSC-100	**062509**	F4B-VSC-100-NL
	25mm	***125696***	*F4B-VSC-25M*	**@**	*F4B-VSC-25M-NL*
206	1-1/8	**125528**	F4B-VSC-102	**@**	F4B-VSC-102-NL
	1-3/16	**123627**	F4B-VSC-103	**@**	F4B-VSC-103-NL
	1-1/4	**123634**	F4B-VSC-104S	**@**	F4B-VSC-104S-NL
	30mm	***125697***	*F4B-VSC-30M*	**@**	*F4B-VSC-30M-NL*
207	1-1/4	**123628**	F4B-VSC-104	**051891**	F4B-VSC-104-NL
	1-3/8	**125529**	F4B-VSC-106	**@**	F4B-VSC-106-NL
	1-7/16	**123629**	F4B-VSC-107	**050844**	F4B-VSC-107-NL
	35mm	***125698***	*F4B-VSC-40M*	**@**	*F4B-VSC-40M-NL*
208	1-1/2	**123630**	F4B-VSC-108	**051892**	F4B-VSC-108-NL
	40mm	***125699***	*F4B-VSC-40M*	**@**	*F4B-VSC-40M-NL*
209	1-11/16	**125530**	F4B-VSC-111	**050836**	F4B-VSC-111-NL
	1-3/4	**125531**	F4B-VSC-112	**@**	F4B-VSC-112-NL
	45mm	***125700***	*F4B-VSC-45M*	**@**	*F4B-VSC-45M-NL*
210	1-15/16	**123631**	F4B-VSC-115	**@**	F4B-VSC-115-NL
	2	**123632**	F4B-VSC-200	**068716**	F4B-VSC-200-NL
	50mm	***125701***	*F4B-VSC-50M*	**@**	*F4B-VSC-50M-NL*
211	2	**123652**	F4B-VSC-200L	**@**	F4B-VSC-200L-NL
	2-3/16	**123633**	F4B-VSC-203	**068809**	F4B-VSC-203-NL
	55mm	***125702***	*F4B-VSC-55M*	**@**	*F4B-VSC-55M-NL*

@Assembled to order

FEATURES/BENEFITS PAGE B8-2 | HOW TO ORDER/NOMENCLATURE PAGE B4-5 | EASY SELECTION PAGE B8-3 | ACCESSORIES PAGE B8-26

DODGE®



Setscrew VSC Ball Bearings
VSC INTERMEDIATE DUTY 4-BOLT FLANGE BEARINGS

Series	Shaft Size	Weight lbs. *kgs.*	A	B	C	D	F Bolt Dia.	H	J	L	N
203	1/2	1.08	1.00	3.00	1.17	2.13	3/8	0.44	0.32	0.96	1.69
	5/8	1.00									
	17mm	*0.48*	*25.4*	*76.2*	*29.7*	*54.1*	*M10*	*11.2*	*8.1*	*24.4*	*42.9*
204	3/4	1.50	1.23	3.38	1.34	2.50	3/8	0.44	0.36	1.12	1.94
	20mm	*0.67*	*31.2*	*85.9*	*34.0*	*63.5*	*M10*	*11.2*	*9.1*	*28.4*	*49.3*
205	7/8	1.98	1.34	3.75	1.37	2.75	7/16	0.50	0.42	1.32	2.06
	15/16	1.86									
	1	1.62									
	25mm	*0.84*	*34.0*	*95.3*	*34.8*	*69.9*	*M10*	*12.7*	*10.7*	*33.5*	*52.3*
206	1-1/8	2.78	1.52	4.25	1.56	3.25	7/16	0.50	0.49	1.57	2.19
	1-3/16	2.68									
	1-1/4	2.50									
	30mm	*1.19*	*38.6*	*108.0*	*39.6*	*82.6*	*M10*	*12.7*	*12.4*	*39.9*	*55.6*
207	1-1/4	3.50	1.71	4.75	1.75	3.63	1/2	0.56	0.53	1.84	2.44
	1-3/8	2.88									
	1-7/16	2.50									
	35mm	*1.28*	*43.4*	*120.7*	*44.5*	*92.2*	*M12*	*14.2*	*13.5*	*46.7*	*62.0*
208	1-1/2	4.50	1.94	5.13	1.98	4.00	1/2	0.56	0.63	2.05	2.38
	40mm	*2.00*	*49.3*	*130.3*	*50.3*	*101.6*	*M12*	*14.2*	*16.0*	*52.1*	*60.5*
209	1-11/16	5.45	1.94	5.38	1.99	4.13	1/2	0.63	0.59	2.22	2.75
	1-3/4	5.35									
	45mm	*2.42*	*49.3*	*136.7*	*50.5*	*104.9*	*M12*	*16.0*	*15.0*	*56.4*	*69.9*
210	1-15/16	6.25	1.94	5.63	2.02	4.38	1/2	0.63	0.55	2.43	2.88
	2	6.00									
	50mm	*2.33*	*49.3*	*143.0*	*51.3*	*111.3*	*M12*	*16.0*	*14.0*	*61.7*	*73.2*
211	2	9.28	2.22	6.50	2.28	5.13	5/8	0.69	0.68	2.71	3.25
	2-3/16	9.00									
	55mm	*4.12*	*56.4*	*165.1*	*57.9*	*130.3*	*M16*	*17.5*	*17.3*	*68.8*	*82.6*

FEATURES/BENEFITS PAGE B8-2	HOW TO ORDER/NOMENCLATURE PAGE B4-5	EASY SELECTION PAGE B8-3	ACCESSORIES PAGE B8-26