SELECTION/DIMENSIONS

Setscrew Ball Bearings

SC FB NORMAL DUTY 3-BOLT FLANGED BRACKET BEARINGS

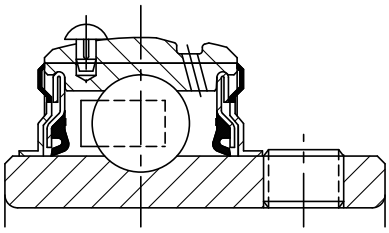

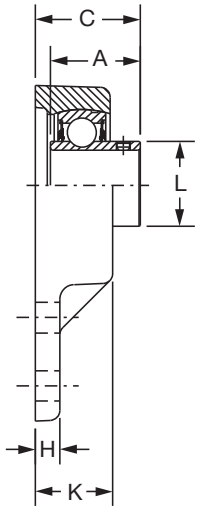

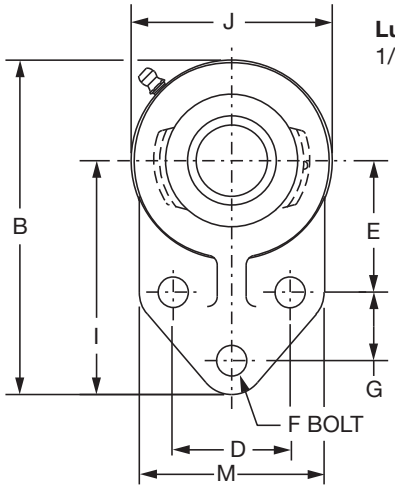

Lube Fitting Thread Size:
1/8-27 NPT

Series	Shaft Size	Standard		No Lube/Sealed for Life (-NL)	
		Part No.	Description	Part No.	Description
204	1/2	**124435**	FB-SC-008	**068720**	FB-SC-008-NL
	5/8	**124436**	FB-SC-010	**059816**	FB-SC-010-NL
	3/4	**124437**	FB-SC-012	**058544**	FB-SC-012-NL
205	7/8	**124438**	FB-SC-014	**056765**	FB-SC-014-NL
	15/16	**124439**	FB-SC-015	**@**	FB-SC-015-NL
	1	**124440**	FB-SC-100	**051774**	FB-SC-100-NL
206	1-1/16	**124441**	FB-SC-101	**@**	FB-SC-101-NL
	1-1/8	**124442**	FB-SC-102	**@**	FB-SC-102-NL
	1-3/16	**124443**	FB-SC-103	**049615**	FB-SC-103-NL
	1-1/4	**124444**	FB-SC-104S	**124450**	FB-SC-104S-NL
207	1-1/4	**124445**	FB-SC-104	**058545**	FB-SC-104-NL
	1-5/16	**124446**	FB-SC-105	**@**	FB-SC-105-NL
	1-3/8	**124447**	FB-SC-106	**@**	FB-SC-106-NL
	1-7/16	**124448**	FB-SC-107	**052016**	FB-SC-107-NL
210	1-11/16	**052906**	FB-SCM-111	**068840**	FB-SCM-111-NL
	1-15/16	**052094**	FB-SC-115	**073669**	FB-SC-115-NL
	2	**058529**	FB-SC-200	**073139**	FB-SC-200-NL

@ Assembled to order.



Setscrew Ball Bearings

SC FB NORMAL DUTY 3-BOLT FLANGED BRACKET BEARINGS

Series	Shaft Size	Weight lbs. kgs.	A	B	C	D	E	F Bolt Dia.	G	H	I	J	K	L	M
	1/2	1.51	1.23	4.25	1.34	1.50	1.69	3/8	0.88	0.31	3.00	2.50	0.98	1.12	2.38
204	5/8	1.48													
	3/4	1.45	31.2	108.0	34.0	38.1	42.9	M10	22.4	7.9	76.2	63.5	24.9	28.4	60.5
	7/8	1.81	1.34	4.75	1.51	1.63	1.81	3/8	1.13	0.38	3.38	2.75	1.11	1.32	2.50
205	15/16	1.78													
	1	1.75	34.0	120.7	38.4	41.4	46.0	M10	28.7	9.7	85.9	69.9	28.2	33.5	63.5
	1-1/16	2.12	1.52	5.38	1.65	1.88	2.06	3/8	1.25	0.38	3.75	3.25	1.13	1.57	2.75
206	1-1/8	2.08													
	1-3/16	2.05													
	1-1/4	2.02	38.6	136.7	41.9	47.8	52.3	M10	31.8	9.7	95.3	82.6	28.7	39.9	69.9
	1-1/4	3.46	1.71	6.13	1.88	2.00	2.37	1/2	1.25	0.50	4.25	3.75	1.31	1.84	3.25
207	1-5/16	3.41													
	1-3/8	3.36													
	1-7/16	3.30	43.4	155.7	47.8	50.8	60.2	M12	31.8	12.7	108.0	95.3	33.3	46.7	82.6
	1-11/16	5.70	1.94	7.50	2.06	2.75	2.94	1/2	1.63	0.50	5.19	4.63	1.50	2.43	4.00
210	1-15/16	5.50													
	2	5.40	49.3	190.5	52.3	69.9	74.7	M12	41.4	12.7	131.8	117.6	38.1	61.7	101.6

FEATURES/BENEFITS PAGE B4-3	HOW TO ORDER/NOMENCLATURE PAGE B4-5	SELECTION PAGE B4-6	ACCESSORIES PAGE B4-98