SELECTION/DIMENSIONS

Setscrew Ball Bearings
SCH-E EXPANSION NORMAL DUTY PILLOW BLOCKS

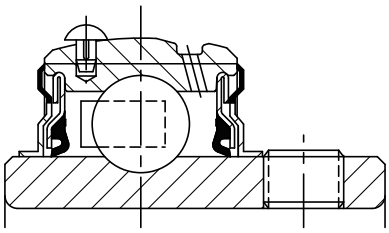

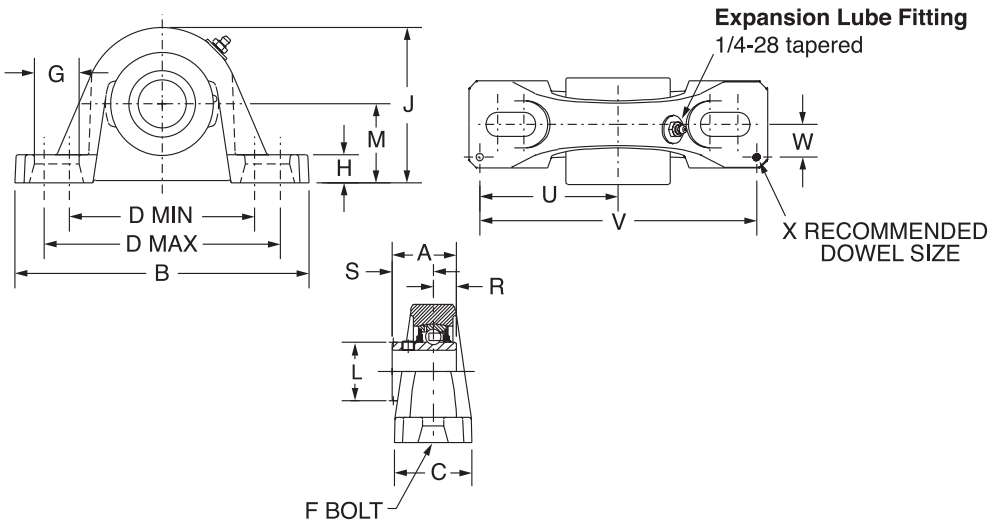

Series	Shaft Size	Expansion		Non-Expansion	
		Part Number	Description	Part Number	Description
205	1	**064637**	P2B-SCH-100-E	**126147**	P2B-SCM-100
	25mm	***073418***	*P2B-SCH-25M-E*	***125925***	*P2B-SCM-25M*
206	1-1/16	**@**	P2B-SCH-101-E	**- - - - - -**	- - - - - - - - -
	1-1/8	**@**	P2B-SCH-102-E	**- - - - - -**	- - - - - - - - -
	1 3/16	**126405**	P2B-SCH-103-E	**126147**	P2B-SCM-103
	1-1/4	**053183**	P2B-SCH-104S-E	**123810**	P2B-SC-104
	30mm	***053021***	*P2B-SCH-30M-E*	***125926***	*P2B-SCM-30M*
207	1-1/4	**@**	P2B-SCH-104-E	**- - - - - -**	- - - - - - - - -
	1-5/16	**@**	P2B-SCH-105-E	**- - - - - -**	- - - - - - - - -
	1-3/8	**@**	P2B-SCH-106-E	**- - - - - -**	- - - - - - - - -
	1-7/16	**126406**	P2B-SCH-107-E	**126810**	P2B-SCM-107
	35mm	***073358***	*P2B-SCH-35M-E*	***125927***	*P2B-SCM-35M*
209	1-5/8	**@**	P2B-SCH-110L-E	**- - - - - -**	- - - - - - - - -
	1-11/16	**057414**	P2B-SCH-111-E	**126812**	P2B-SCM-111
	1-3/4	**074926**	P2B-SCH-112-E	**126813**	P2B-SCM-112
	45mm	***056481***	*P2B-SCH-45M-E*	***125929***	*P2B-SCM-45M*
210	1-15/16	**126407**	P2B-SCH-115-E	**126814**	P2B-SCM-115
	2	**052224**	P2B-SCH-200-E	**126815**	P2B-SCM-200
	50mm	***056483***	*P2B-SCH-50M-E*	***125930***	*P2B-SCM-50M*
211	2-3/16	**126408**	P2B-SCH-203-E	**126816**	P2B-SCM-203
	2-1/4	**068800**	P2B-SCH-204-E	**126817**	P2B-SCM-204
	55mm	***053025***	*P2B-SCH-55M-E*	***125931***	*P2B-SCM-55M*
212	2-7/16	**126409**	P2B-SCH-207-E	**126818**	P2B-SCM-207
	60mm	***@***	*P2B-SCH-60M-E*	- - - - - -	- - - - - - - - -

@Assembled to order

FEATURES/BENEFITS PAGE B4-3	HOW TO ORDER/NOMENCLATURE PAGE B4-5	SELECTION PAGE B4-6	ACCESSORIES PAGE B4-98



Setscrew Ball Bearings

SCH-E EXPANSION NORMAL DUTY PILLOW BLOCKS

Series	Shaft Size	Weight lbs. kgs.	A	B	C	D		F	G	H	J
						Min.	Max.				
205	1	2.8	1.34	6.25	1.75	4.25	5.00	1/2	0.94	0.75	3.31
	25mm	*1.2*	*34.0*	*158.8*	*44.5*	*108.0*	*127.0*	*M12*	*23.9*	*19.1*	*84.1*
206	1-1/16 1-1/8 1 3/16 1-1/4	4.8 4.7 4.6 4.5	1.52	6.50	1.75	4.68	5.44	1/2	0.94	0.71	3.75
	30mm	*1.9*	*38.6*	*165.1*	*44.5*	*118.9*	*138.2*	*M12*	*23.9*	*18.0*	*95.3*
207	1-1/4 1-5/16 1-3/8 1-7/16	6.7 6.6 6.5 6.4	1.71	7.25	1.93	5.18	5.88	1/2	0.91	0.93	4.19
	35mm	*2.7*	*43.4*	*184.2*	*49.0*	*131.6*	*149.4*	*M12*	*23.1*	*23.6*	*106.4*
209	1-5/8 1-11/16 1-3/4	6.4 6.3 6.2	1.94	8.12	2.25	6.00	6.68	5/8	1.02	0.75	4.53
	45mm	*2.6*	*49.3*	*206.2*	*57.2*	*152.4*	*169.7*	*M16*	*25.9*	*19.1*	*115.1*
210	1-15/16 2	9.8 9.7	1.94	8.88	2.30	6.38	7.44	5/8	1.21	0.88	4.96
	50mm	*4.0*	*49.3*	*225.6*	*58.4*	*162.1*	*189.0*	*M16*	*30.7*	*22.4*	*126.0*
211	2-3/16 2-1/4	14.3 14.2	2.22	9.50	2.37	6.88	7.94	5/8	1.21	0.88	5.40
	55mm	*5.9*	*56.4*	*241.3*	*60.2*	*174.8*	*201.7*	*M16*	*30.7*	*22.4*	*137.2*
212	2-7/16	16.6	2.31	10.75	2.69	7.50	8.50	3/4	1.32	0.94	6.09
	60mm	*6.8*	*58.7*	*273.1*	*68.3*	*190.5*	*215.9*	*M18*	*33.5*	*23.8*	*154.7*

Series	Shaft Size	L	M	R	S	T Total Expansion	U	V	W	X
205	1	1.32	1.69	0.56	0.78	0.16	2.88	5.76	0.56	0.12
	25mm	*33.5*	*42.9*	*14.2*	*19.8*	*4.1*	*73.2*	*146.3*	*14.2*	*3.0*
206	1-1/16 1-1/8 1 3/16 1-1/4	1.57	1.88	0.58	0.94	0.16	2.91	5.82	0.56	0.12
	30mm	*39.9*	*47.8*	*14.7*	*23.9*	*4.1*	*73.9*	*147.8*	*14.2*	*3.0*
207	1-1/4 1-5/16 1-3/8 1-7/16	1.84	2.13	0.67	1.04	0.16	3.26	6.52	0.69	0.12
	35mm	*46.7*	*54.1*	*17.0*	*26.4*	*4.1*	*82.8*	*165.6*	*17.5*	*3.0*
209	1-5/8 1-11/16 1-3/4	2.05	2.25	0.75	1.19	0.25	3.69	7.38	0.81	0.12
	45mm	*52.1*	*57.2*	*19.1*	*30.2*	*6.4*	*93.7*	*187.5*	*20.6*	*3.0*
210	1-15/16 2	2.43	2.50	0.75	1.19	0.22	3.94	7.88	0.81	0.12
	50mm	*61.7*	*63.5*	*19.1*	*30.2*	*5.6*	*100.1*	*200.2*	*20.6*	*3.0*
211	2-3/16 2-1/4	2.71	2.75	.87	1.35	0.22	4.25	8.50	0.88	0.12
	55mm	*68.8*	*69.9*	*22.1*	*34.3*	*5.6*	*108.0*	*215.9*	*22.4*	*3.0*
212	2-7/16	2.97	3.00	0.90	1.41	0.22	4.88	9.76	0.94	0.12
	60mm	*75.4*	*76.2*	*22.9*	*35.8*	*5.6*	*124.0*	*247.9*	*23.9*	*3.0*

FEATURES/BENEFITS PAGE B4-3	HOW TO ORDER/NOMENCLATURE PAGE B4-5	SELECTION PAGE B4-6	ACCESSORIES PAGE B4-98