

DIMENSIONS

IMPERIAL Bearing Insert
2-3/8 THRU 5 INCH

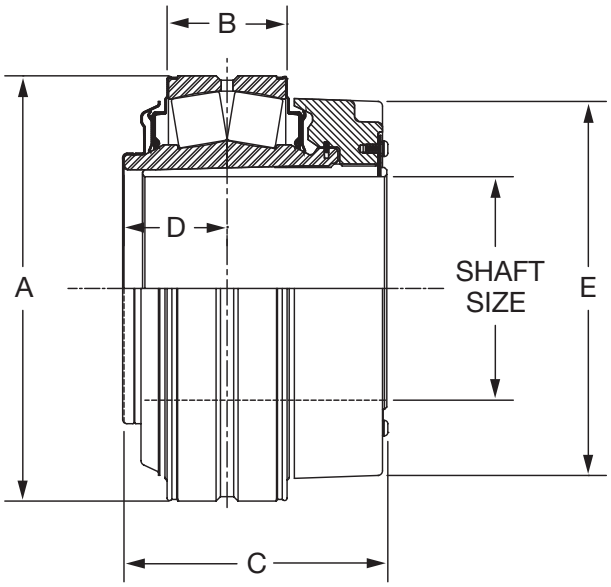

TRIDENT SEAL

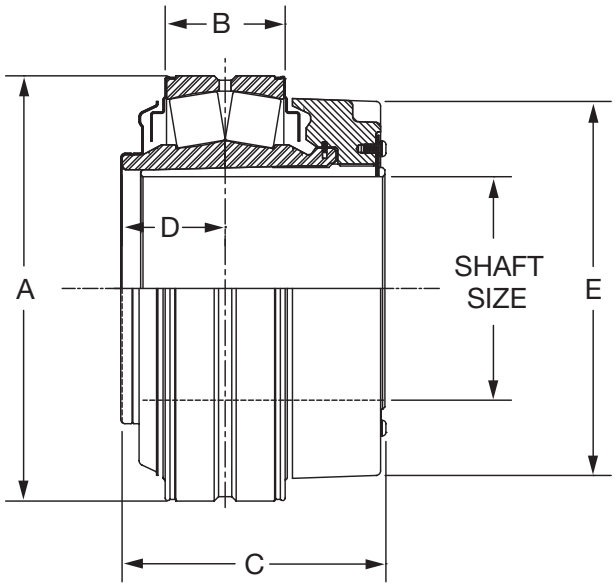

LABYRINTH SEAL

Bearing Series	Shaft Size	TRIDENT Seal		Labyrinth Seal		A	B	C	D	E
		Part Number	Part Name	Part Number	Part Name					
22213	2-1/4 *	**071592**	INS-IPE-204R	**071595**	INS-IPE-204L	4.72	1.28	3.42	1.21	3.88
	2-3/8	**070894**	INS-IP-206R	**070926**	INS-IP-206L					
	2-7/16	**070895**	INS-IP-207R	**070927**	INS-IP-207L					
	2-1/2	**070896**	INS-IP-208R	**070928**	INS-IP-208L					
22215	2-11/16	**070897**	INS-IP-211R	**070929**	INS-IP-211L	5.12	1.28	3.50	1.22	4.28
	2-3/4	**070898**	INS-IP-212R	**070930**	INS-IP-212L					
	2-15/16	**070899**	INS-IP-215R	**070931**	INS-IP-215L					
	3	**070900**	INS-IP-300R	**070932**	INS-IP-300L					
22218	3-3/16	**070901**	INS-IP-303R	**070933**	INS-IP-303L	6.30	1.63	4.17	1.48	5.00
	3-1/4	**070902**	INS-IP-304R	**070934**	INS-IP-304L					
	3-7/16	**070903**	INS-IP-307R	**070935**	INS-IP-307L					
	3-1/2	**070904**	INS-IP-308R	**070936**	INS-IP-308L					
22220	3-11/16	**070905**	INS-IP-311R	**070937**	INS-IP-311L	7.09	1.88	4.70	1.65	5.56
	3-15/16	**070906**	INS-IP-315R	**070938**	INS-IP-315L					
	4	**070907**	INS-IP-400R	**070939**	INS-IP-400L					
22222	4-7/16	**070908**	INS-IP-407R	**070940**	INS-IP-407L	7.87	2.16	5.23	1.94	6.44
	4-1/2	**070909**	INS-IP-408R	**070941**	INS-IP-408L					
22226	4-15/16	**070910**	INS-IP-415R	**070942**	INS-IP-415L	9.06	2.59	5.98	2.11	7.63
	5	**070911**	INS-IP-500R	**070943**	INS-IP-500L					

* Insert for IMPERIAL-Type E dimensioned housings only

Metric shaft sizes available upon request

FEATURES/BENEFITS PAGE B14-2	SPECIFICATIONS PAGE B14-5	HOW TO ORDER/NOMENCLATUE PAGE B14-8	SELECTION PAGE B14-14