SELECTION/DIMENSIONS

DODGE®

D-LOK® Ball Bearings
DL NORMAL DUTY 2-BOLT PILOTED FLANGE BEARINGS

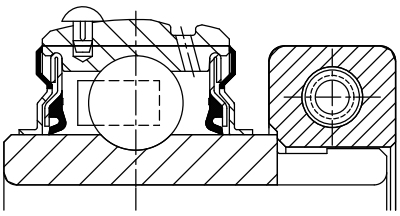

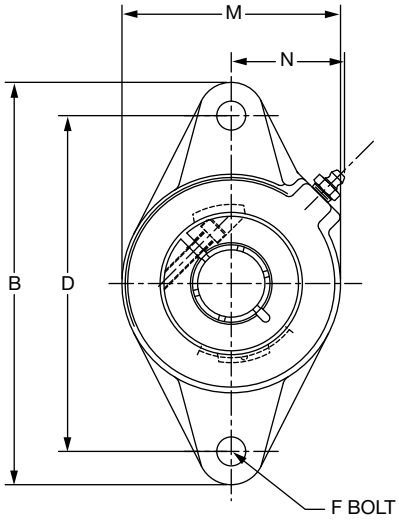

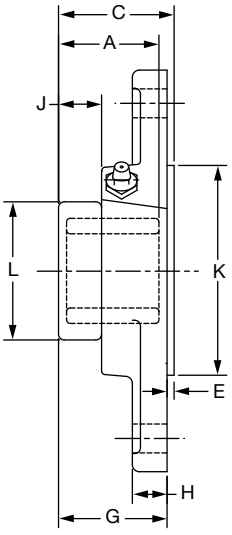

Series	Shaft Size	Part No.	Description
204	3/4	**056696**	F2BZ-DL-012
	20mm	***126646***	*F2BZ-DL-20M*
205	7/8	**067997**	F2BZ-DL-014
	15/16	**@**	F2BZ-DL-015
	1	**056867**	F2BZ-DL-100
	25mm	***126647***	*F2BZ-DL-25M*
206	1-1/8	**@**	F2BZ-DL-102
	1-3/16	**@**	F2BZ-DL-103
	1-1/4	**064473**	F2BZ-DL-104S
	30mm	***126648***	*F2BZ-DL-30M*
207	1-1/4	**074818**	F2BZ-DL-104
	1-3/8	**@**	F2BZ-DL-106
	1-7/16	**@**	F2BZ-DL-107
	35mm	***126649***	*F2BZ-DL-35M*
208	1-1/2	**065770**	F2BZ-DL-108
	40mm	***126650***	*F2BZ-DL-40M*
209	1-5/8	**073753**	F2BZ-DL-110L
	1-11/16	**@**	F2BZ-DL-111
	1-3/4	**@**	F2BZ-DL-112
	45mm	***126651***	*F2BZ-DL-45M*
210	1-15/16	**067958**	F2BZ-DL-115
	2	**065771**	F2BZ-DL-200
	50mm	***126652***	*F2BZ-DL-50M*

@ Assembled to order



D-LOK® Ball Bearings
DL NORMAL DUTY 2-BOLT PILOTED FLANGE BEARINGS

Series	Shaft Size	Weight lbs *kg*	A	B	C	D	E	F Bolt Dia.	G	H	J	K	L	M	N
204	3/4	1.4	1.28	4.41	1.53	3.53	0.14	3/8	1.39	0.50	0.41	2.165/2.163	1.71	2.38	1.50
	20mm	*0.6*	*32.5*	*112.0*	*38.9*	*89.7*	*3.6*	*M10*	*35.3*	*12.7*	*10.4*	*54.99/54.94*	*43.4*	*60.5*	*38.1*
205	7/8	1.8	1.44	4.88	1.60	3.89	0.14	7/16	1.47	0.52	0.51	2.362/2.360	1.99	2.75	1.44
	15/16	1.8													
	1	1.8													
	25mm	*0.8*	*36.6*	*124.0*	*40.6*	*98.8*	*3.6*	*M10*	*37.3*	*13.2*	*13.0*	*59.99/59.94*	*50.5*	*69.9*	*36.6*
206	1-1/8	2.4	1.56	5.56	1.72	4.59	0.12	7/16	1.60	0.50	0.53	3.150/3.148	2.22	3.13	1.56
	1-3/16	2.4													
	1-1/4	2.3													
	30mm	*1.1*	*39.6*	*141.2*	*43.7*	*116.7*	*3.0*	*M10*	*40.6*	*12.7*	*13.5*	*80.01/79.96*	*56.4*	*79.5*	*39.6*
207	1-1/4	3.5	1.75	6.13	1.95	5.12	0.16	1/2	1.79	0.56	0.57	3.543/3.541	2.69	3.75	1.84
	1-3/8	3.5													
	1-7/16	3.4													
	35mm	*1.6*	*44.5*	*155.7*	*49.5*	*130.0*	*4.1*	*M12*	*45.5*	*14.2*	*14.5*	*89.99/89.94*	*68.3*	*95.3*	*46.7*
208	1-1/2	4.8	2.01	6.75	2.20	5.66	0.16	1/2	2.05	0.56	0.70	3.937/3.935	2.74	4.13	1.83
	40mm	*2.2*	*51.1*	*171.5*	*55.9*	*143.8*	*4.1*	*M12*	*52.1*	*14.2*	*17.8*	*100.00/99.95*	*69.6*	*104.9*	*46.5*
209	1-5/8	5.2	2.01	7.06	2.22	5.84	0.16	1/2	2.06	0.63	0.66	4.134/4.132	2.99	4.38	1.91
	1-11/16	5.2													
	1-3/4	5.2													
	45mm	*2.4*	*51.1*	*179.3*	*56.4*	*148.3*	*4.1*	*M14*	*52.3*	*16.0*	*16.8*	*105.00/104.95*	*75.9*	*111.3*	*48.5*
210	1-15/16	6.0	2.01	7.44	2.25	6.19	0.16	1/2	2.10	0.63	0.63	4.134/4.132	3.24	4.56	2.03
	2	5.9													
	50mm	*2.6*	*51.1*	*189.0*	*57.2*	*157.2*	*4.1*	*M16*	*53.3*	*16.0*	*16.0*	*105.00/104.95*	*82.3*	*115.8*	*51.6*

FEATURES/BENEFITS PAGE B6-3	HOW TO ORDER/NOMENCLATURE PAGE B6-5	SELECTION/DIMENSIONS PAGE B6-10	ACCESSORIES PAGE B6-62