SELECTION/DIMENSIONS

Type C Units - Inch

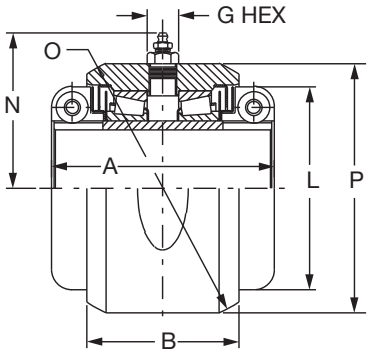

D UNIT
USED IN NON-EXPANSION HOUSINGS

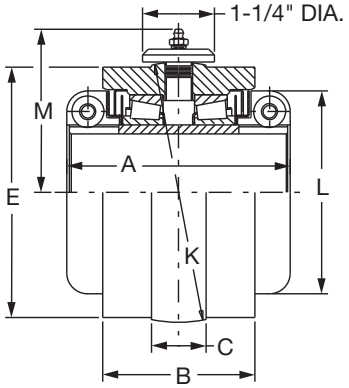

S-1 UNIT
USED IN EXPANSION HOUSINGS

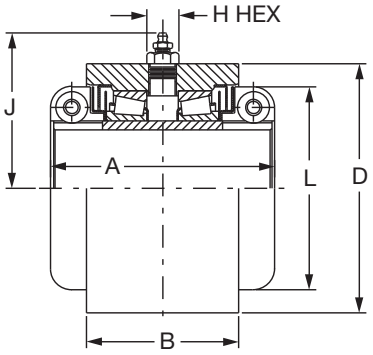

B-1 UNIT
USED IN CUSTOMER MANUFACTURED HOUSINGS

Type C Units - Inches

Shaft Size Inches #	D Units		S-1 Units		B-1 Units		Weight Lbs (Approx)
	Part Number	Part Name	Part Number	Part Name	Part Number	Part Name	
1-7/16	**065282**	DU-C-107	**087199**	S1U-C-107	**069060**	B1U-C-107	7
1-1/2	**065258**	DU-C-108	**087205**	S1U-C-108	**- - - -**	- - - -	11
1-11/16	**065283**	DU-C-111	**087200**	S1U-C-111	**069061**	B1U-C-111	11
1-3/4	**065260**	DU-C-112	**087207**	S1U-C-112	**- - - -**	- - - -	11
1-15/16	**065284**	DU-C-115	**087194**	S1U-C-115	**069062**	B1U-C-115	12
2	**065262**	DU-C-200	**087209**	S1U-C-200	**069034**	B1U-C-200	18
2-3/16	**065285**	DU-C-203	**087195**	S1U-C-203	**069063**	B1U-C-203	17
2-1/4	**065265**	DU-C-204	**087215**	S1U-C-204	**- - - -**	- - - -	17
2-7/16	**065286**	DU-C-207	**087196**	S1U-C-207	**069064**	B1U-C-207	20
2-1/2	**- - - -**	- - - -	**- - - -**	- - - -	**069039**	B1U-C-208	35
2-11/16	**065268**	DU-C-211	**087218**	S1U-C-211	**- - - -**	- - - -	34
2-7/8	**065270**	DU-C-214	**087220**	S1U-C-214	**- - - -**	- - - -	34
2-15/16	**065287**	DU-C-215	**087197**	S1U-C-215	**069065**	B1U-C-215	34
3	**065271**	DU-C-300	**087221**	S1U-C-300	**- - - -**	- - - -	55
3-3/16	**- - - -**	- - - -	**087222**	S1U-C-303	**069045**	B1U-C-303	53
3-1/4	**- - - -**	- - - -	**- - - -**	- - - -	**069046**	B1U-C-304	53
3-7/16	**065288**	DU-C-307	**087198**	S1U-C-307	**069066**	B1U-C-307	51
3-1/2	**065274**	DU-C-308	**087224**	S1U-C-308	**- - - -**	- - - -	115
3-11/16	**- - - -**	- - - -	**087225**	S1U-C-311	**- - - -**	- - - -	115
3-15/16	**065304**	DU-C-315	**087210**	S1U-C-315	**069067**	B1U-C-315	115
4	**- - - -**	- - - -	**- - - -**	- - - -	**069069**	B1U-C-400	115
4-7/16	**065305**	DU-C-407	**087211**	S1U-C-407	**- - - -**	- - - -	138
4-15/16	**065306**	DU-C-415	**087212**	S1U-C-415	**- - - -**	- - - -	190

#Consult Dodge For Sizes Not Listed.



Type C Units - Inch

Shaft Size Inches	A	B	C	D**	E	G Hex	H Hex	J	K	L	M	N	O**	P
1-7/16	4.50	2.69	0.75	3.875	3.81	7/16	5/8	3.13	4.062	3.09	2.69	2.50	4.438	3.94
1-1/2 1-11/16 1-3/4	4.88	3.13	0.75	4.250	4.13	7/16	5/8	3.31	4.438	3.50	2.88	2.75	5.000	4.50
1-15/16	5.25	3.25	0.88	4.750	4.50	7/16	5/8	3.56	4.812	3.88	3.06	2.88	5.312	4.75
2 2-3/16 2-1/4	5.75	3.75	0.88	5.250	5.00	7/16	5/8	3.81	5.375	4.38	5.31	3.19	6.000	5.38
2-7/16	6.00	4.00	1.00	5.750	5.31	5/8	5/8	4.06	5.687	4.66	3.80	4.09	6.375	5.69
2-1/2 2-11/16 2-7/8 2-15/16	6.50	4.44	1.00	6.500	6.19	5/8	3/4	4.63	6.562	5.44	4.50	4.50	7.312	6.50
3 3-3/16 3-1/4 3-7/16	7.00	5.00	1.25	7.750	7.50	5/8	3/4	5.25	8.000	5.94	4.88	5.56	8.625	7.91
3-1/2 3-11/16 3-15/16 4	9.50	6.25	1.50	9.250	8.81	5/8	3/4	6.00	9.500	7.38	5.63	6.38	10.250	9.75
4-7/16	10.00	6.63	1.75	10.500	9.84	3/4	3/4	6.63	10.625	8.38	6.19	6.89	11.125	10.38
4-15/16	11.25	7.38	2.00	11.750	10.84	3/4	3/4	7.25	11.500	9.38	6.63	7.44	12.500	11.88

NOTE: All sizes use a 1/8 - 27 NPT hydraulic grease fitting

Δ A One-Piece Collar Furnished Up Thru 2-7/16 Sizes. Larger Sizes Use A Two-Piece Collar

** + .000 - .002