SELECTION/DIMENSIONS

Type E-Xtra TP Take-Up Bearing - Inch

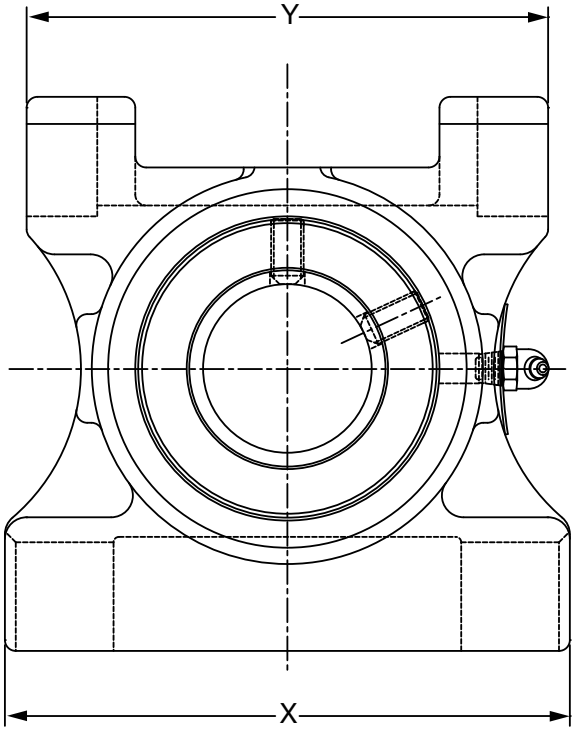

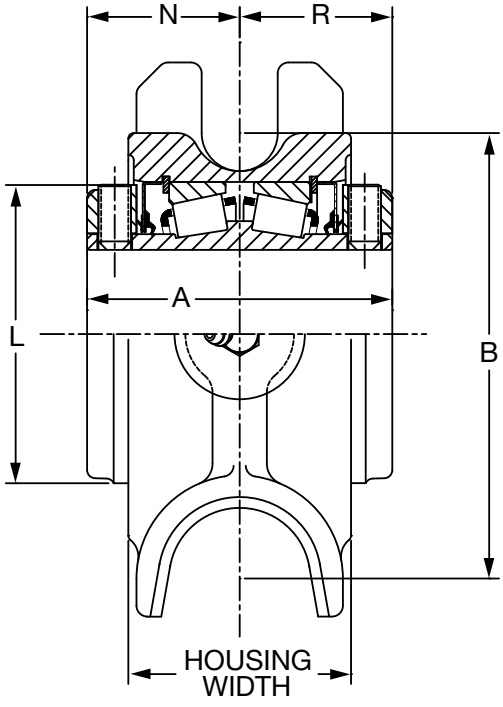

1-3/4” THRU 3” CONSTRUCTION

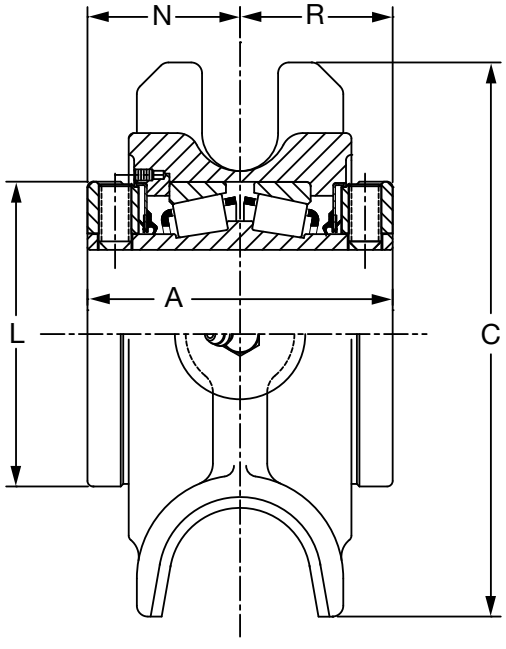

3-3/16” THRU 4” CONSTRUCTION

FEATURES/BENEFITS PAGE B10-2	HOW TO ORDER/NOMENCLATURE PAGE B10-9	EASY SELECTION PAGE B10-15	ACCESSORIES PAGE B10-64



Type E-Xtra TP Take-Up Bearing - Inch

Gray Iron				
Shaft Size Inches #	**Part Number**	**Part Name**	**Weight Lbs (Approx)**	**Frame Size Ref.**
1-3/4	**023149**	TP-E-112R	14	TP10
1-7/8	**023150**	TP-E-114R	14	TP10
1-15/16	**023151**	TP-E-115R	14	TP10
2	**023152**	TP-E-200R	14	TP10
2-3/16	**023153**	TP-E-203R	16	TP20
2-1/4	**023154**	TP-E-204R	21	TP30
2-7/16	**023155**	TP-E-207R	21	TP30
2-1/2	**023156**	TP-E-208R	21	TP30
2-11/16	**023157**	TP-E-211R	29	TP40
2-3/4	**023158**	TP-E-212R	29	TP40
2-15/16	**023159**	TP-E-215R	29	TP40
3	**023160**	TP-E-300R	29	TP40
3-3/16	**023161**	TP-E-303R	43	TP50
3-1/4	**023162**	TP-E-304R	43	TP50
3-7/16	**023163**	TP-E-307R	42	TP50
3-1/2	**023164**	TP-E-308R	42	TP50
3-15/16	**023165**	TP-E-315R	62	TP60
4	**023166**	TP-E-400R	62	TP60

Consult DODGE For Sizes Not Listed.

Shaft Size	**A**	**B**	**C**	**L**	**N**	**Housing Width**	**X**	**Y**
1-3/4 1-7/8 1-15/16 2	3.50	5.19	6.38	3.44	1.75	2.56	6.50	6.00
2 -3/16	3.75	5.81	6.88	3.75	1.88	2.56	6.75	7.00
2 -1/4 2 -7/16 2 -1/2	4.00	6.25	7.44	4.06	2.00	3.00	7.50	7.00
2-11/16 2 -3/4 2-15/16 3	4.50	7.19	8.31	4.72	2.25	3.00	850	8.00
3-3/16 3-1/4 3-7/16 3-1/2	5 .00	8.31	9.63	5.50	2.50	3.75	9.50	9.00
3-15/16 4	6.25	9.06	11.00	6.00	3.13	4.75	11.00	10.50

NOTE: All sizes use a 1/8-27 NPT hydraulic grease fitting