DODGE®



D-LOK® Ball Bearings

DL LFT NORMAL DUTY 2-BOLT FLANGE BEARINGS

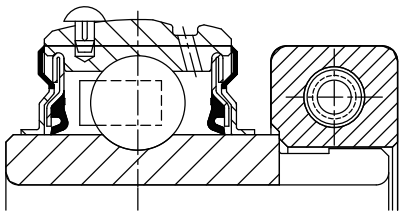

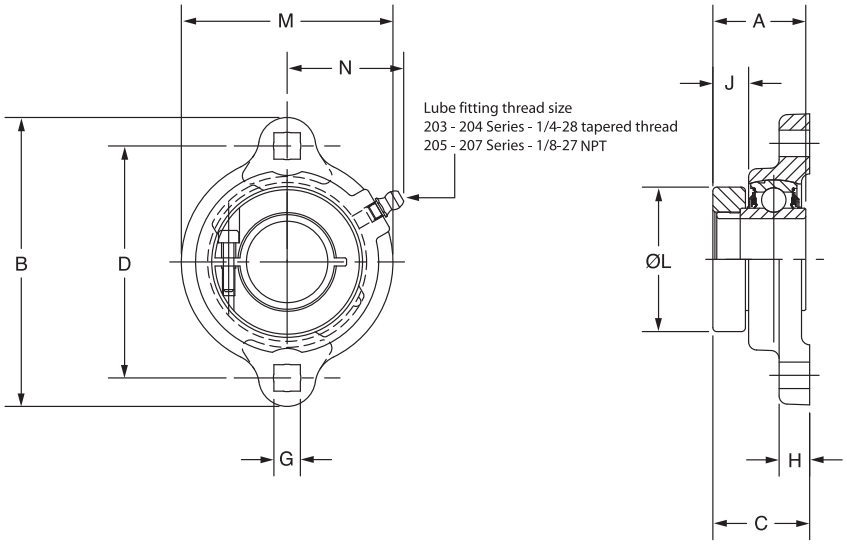

Series	Shaft Size	Part No.	Description
204	3/4	**049466**	LFT-DL-012
	20mm	***073072***	*LFT-DL-20M*
205	7/8	**053140**	LFT-DL-014
	15/16	**062525**	LFT-DL-015
	1	**052668**	LFT-DL-100
206	1-1/8	**@**	LFT-DL-102
	1-3/16	**056889**	LFT-DL-103
	1-1/4	**052535**	LFT-DL-104S
207	1-1/4	**064735**	LFT-DL-104
	1-3/8	**@**	LFT-DL-106
	1-7/16	**049447**	LFT-DL-107

@ Assembled to order

Series	Shaft Size	Weight lbs	A	B	C	D	G	H	J	L	M	N
204	3/4	0.80	1.28	3.56	1.27	2.81	0.34	0.42	0.42	1.71	2.38	1.34
	20mm		*32.5*	*90.4*	*32.3*	*71.4*	*8.6*	*10.7*	*10.7*	*43.4*	*60.5*	*34.0*
205	7/8	0.95	1.44	3.75	1.35	3	0.34	0.42	0.48	1.99	2.63	1.44
	15/16	0.90										
	1	0.85	36.6	95.3	34.3	76.2	8.6	10.7	12.2	50.5	66.8	36.6
206	1-1/8	1.50	1.56	4.44	1.53	3.56	0.41	0.47	0.54	2.22	3.25	1.72
	1-3/16	1.45										
	1-1/4	1.40	39.6	112.8	38.9	90.4	10.4	11.9	13.7	56.4	82.6	43.7
207	1-1/4	1.85	1.75	4.82	1.64	3.94	0.41	0.5	0.57	2.69	3.5	1.83
	1-3/8	1.80										
	1-7/16	1.75	44.5	122.4	41.7	100.1	10.4	12.7	14.5	68.3	88.9	46.5

Lube fitting thread size - 1/4-28 tapered thread