SELECTION/DIMENSIONS

DODGE®



USAF 500 Adaptor Assembly (SNW)

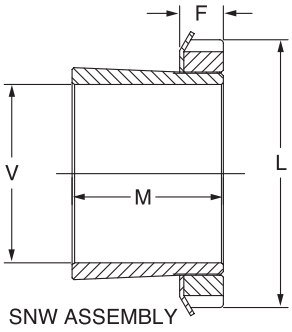

SNW ASSEMBLY

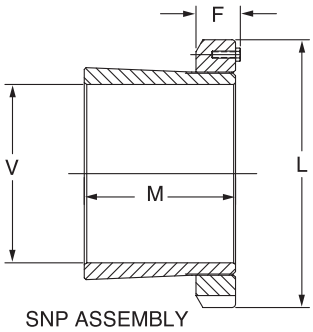

SNP ASSEMBLY

V Shaft Dia. (In)	Housing	SNW/SNP Number	Part Number	Approx Wt. (Lbs)	L (in.)	F Max (in.)	M (in.)
1-7/16	509	H309-SNW-107	**046350**	1.0	2.53	0.52	1.58
1-11/16	510	H310-SNW-111	**046351**	1.0	2.69	0.58	1.77
1-15/16	511	H311-SNW-115	**046352**	0.8	2.97	0.58	1.85
2-3/16	513	H313-SNW-203	**046353**	1.6	3.38	0.64	2.10
2-7/16	515	H315-SNW-207	**046354**	2.6	3.88	0.69	2.29
2-1/2		H315-SMW-208	**046355**	2.3			
2-11/16	516	H316-SNW-211	**046356**	2.6	4.16	0.69	2.37
2-3/4		H316-SNW-212	**046357**	2.6			
2-15/16	517	H317-SNW-215	**046358**	3.0	4.41	0.72	2.47
3		H317-SNW-300	**046359**	2.5			
3-3/16	518	H318-SNW-303	**046360**	3.1	4.66	0.80	2.63
3-7/16	520	H320-SNW-307	**046361**	4.6	5.19	0.83	2.87
3-1/2		H320-SNW-308	**046362**	4.4			
3-15/16	522	H322-SNW-315	**046363**	5.6	5.72	0.86	3.19
4		H322-SNW-400	**046364**	5.0			
4-3/16	524	H3124-SNW-403	**046430**	6.5	6.12	0.92	3.47
4-7/16	526	H3126-SNW-407	**046431**	9.2	6.75	0.95	3.76
4-1/2		H3126-SNW-408	**046432**	8.6			
4-15/16	528	H3128-SNW-415	**046433**	10.0	7.09	1.02	3.97
5		H3128-SNW-500	**046434**	9.0			
5-3/16	530	SNW30-503	**043618**	12.7	7.69	1.08	4.22
5-7/16	532	SNW32-507	**043619**	15.9	8.06	1.14	4.57
5-1/2		SNW32-508	**043634**	15.0			
5-15/16	534	SNW34-515	**043620**	17.6	8.66	1.23	4.83
6		SNW34-600	**043621**	17.0			
6-7/16	536	SNW36-607	**043622**	17.0	9.06	1.27	5.02
6-1/2		SNW36-608	**043623**	18.0			
6-15/16	538	SNW38-615	**043624**	18.0	9.47	1.30	5.26
7		SNW38-700	**043625**	17.0			
7-3/16	540	SNW40-703	**046545**	30.7	9.84	1.36	5.48
7-1/2	544S	SNW44-708	**043627**	30.2	11.00	1.42	5.90
7-15/16	544	SNW44-715	**043626**	36.0			
8		SNW44-800	**043628**	34.7			
8-7/16	048	SNP048-807	**043629**	38.0	11.44	1.73	5.44
8-1/2		SNP048-808	**043630**	30.0			
8-15/16		SNP048-815	**043631**	28.0			
9		SNP048-900	**043632**	22.0			
9-7/16	052	SNP052-907	**043585**	41.1	12.19	1.80	6.02
9-1/2		SNP052-908	**422538**	40.0			
9-15/16	056	SNP056-915	**043586**	43.7	13.00	1.89	6.19
10		SNP056-1000	**043633**	42.0			
10-7/16	056L	SNP056-1007	**043580**	30.0			
10-1/2		SNP056-1008	**422567**	28.0			

FEATURES/BENEFITS PAGE B15-3	SPECIFICATION/HOW TO ORDER PAGE B15-7	NOMENCLATURE PAGE B15-8	SELECTION PAGE B15-13