DODGE®

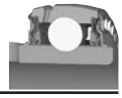

Extreme Duty Setscrew Ball Bearings

SCED NORMAL DUTY NARROW SLOT TAKE-UP BEARINGS

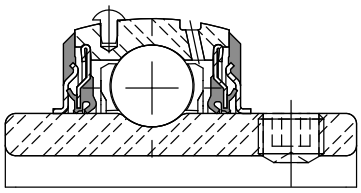

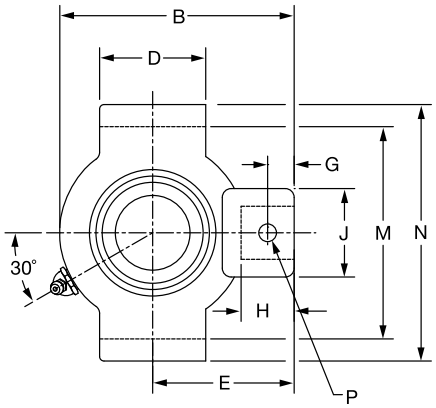

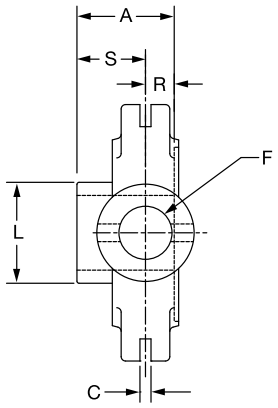

Series	Shaft Size	Part No.	Description	Weight lbs. kgs.	Take-Up Frame No. Ref.	A	B	C	D	E	F Screw Dia	G
204	1/2	@	NSTU-SCED-008	1.6	NS210	1.23	3.50	0.250	1.50	2.19	3/4	0.44
	5/8	@	NSTU-SCED-010	1.5								
	3/4	076076	NSTU-SCED-012	1.4								
	20mm	***076265***	*NSTU-SCED-20M*	*0.8*		*31.2*	*88.9*	*6.35*	*38.1*	*55.6*	*19.1*	*11.2*
205	7/8	@	NSTU-SCED-014	1.7	NS210	1.34	3.56	0.250	1.50	2.19	3/4	0.44
	15/16	@	NSTU-SCED-015	1.6								
	1	076077	NSTU-SCED-100	1.5								
	25mm	***076266***	*NSTU-SCED-25M*	*0.7*		*34.0*	*90.4*	*6.35*	*38.1*	*55.6*	*19.1*	*11.2*
206	1-1/16	@	NSTU-SCED-101	2.9	NS308	1.52	4.31	0.250	1.50	2.69	3/4	0.44
	1-1/8	076078	NSTU-SCED-102	2.8								
	1-3/16	076079	NSTU-SCED-103	2.7								
	1-1/4	076080	NSTU-SCED-104S	2.6								
	30mm	***076267***	*NSTU-SCED-30M*	*1.2*		*38.6*	*109.5*	*6.35*	*38.1*	*68.3*	*19.1*	*11.2*
207	1-1/4	076081	NSTU-SCED-104	2.8	NS308	1.71	4.50	0.250	2.50	2.69	3/4	0.50
	1-5/16	@	NSTU-SCED-105	2.7								
	1-3/8	076082	NSTU-SCED-106	2.6								
	1-7/16	076083	NSTU-SCED-107	2.5								
	35mm	***076268***	*NSTU-SCED-35M*	*1.2*		*43.4*	*114.3*	*6.35*	*63.5*	*68.3*	*19.1*	*12.7*

@ Assembled to order

See B15-9 for Take-Up Frames

Series	Shaft Size	H	J	L	M	N	P Pin Dia	R	S
204	1/2	0.88	1.38	1.12	2.635/2.605	3.13	0.32	0.50	0.73
	5/8								
	3/4								
	20mm	*22.4*	*35.1*	*28.4*	*66.93/66.17*	*79.5*	*8.1*	*12.7*	*18.5*
205	7/8	0.88	1.38	1.32	2.635/2.605	3.13	0.32	0.56	0.78
	15/16								
	1								
	25mm	*22.4*	*35.1*	*33.5*	*66.93/66.17*	*79.5*	*8.1*	*14.2*	*19.8*
206	1-1/16	0.88	1.38	1.57	2.635/2.605	3.13	0.32	0.58	0.94
	1-1/8								
	1-3/16								
	1-1/4								
	30mm	*22.4*	*35.1*	*39.9*	*66.93/66.17*	*79.5*	*8.1*	*14.7*	*23.9*
207	1-1/4	0.94	1.38	1.84	3.510/3.480	4.13	0.32	0.67	1.04
	1-5/16								
	1-3/8								
	1-7/16								
	35mm	*23.9*	*35.1*	*46.7*	*89.15/88.39*	*104.9*	*8.1*	*17.0*	*26.4*

FEATURES/BENEFITS PAGE B3-2	EASY SELECTION PAGE B3-3	SELECTION PAGE B3-5	ACCESSORIES PAGE B3-41