SELECTION/DIMENSIONS

Setscrew Ball Bearings
SCMAH MEDIUM DUTY AIR HANDLING 2-BOLT FLANGE BEARINGS

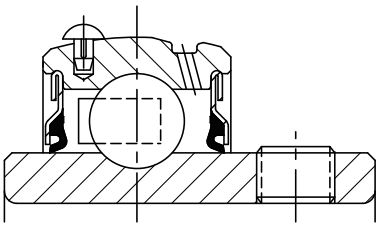

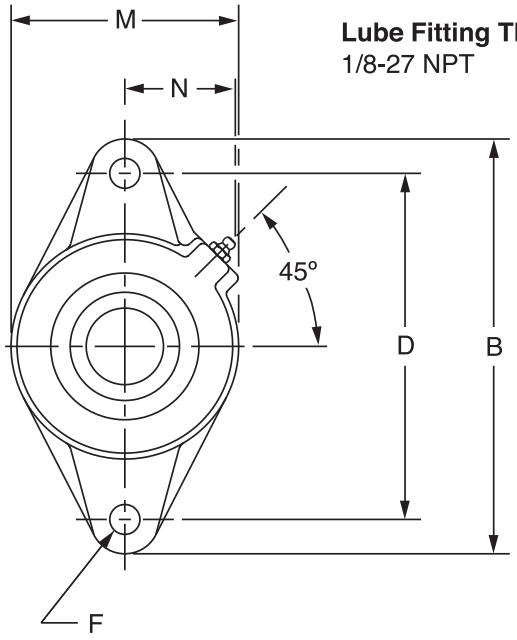

Lube Fitting Thread Size:
1/8-27 NPT

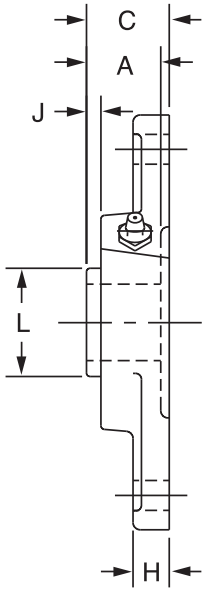

Series	Shaft Size	Part No.	Standard Description
206	1	**050498**	F2B-SCMAH-100
	25mm	**@**	*F2B-SCMAH-25M*
207	1-3/16	**050146**	F2B-SCMAH-103
	1-1/4	**123733**	F2B-SCAH-104
	30mm	**@**	*F2B-SCMAH-30M*
208	1-7/16	**123755**	F2B-SCMAH-107
	35mm	**@**	*F2B-SCMAH-35M*
209	1-1/2	**123756**	F2B-SCMAH-108
	1-5/8	**@**	F2B-SCAH-110L
	40mm	**@**	*F2B-SCMAH-40M*
210	1-11/16	**123757**	F2B-SCMAH-111
	1-3/4	**123758**	F2B-SCMAH-112
	45mm	**@**	*F2B-SCMAH-45M*
211	1-15/16	**064198**	F2B-SCMAH-115
	2	**@**	F2B-SCMAH-200
	50mm	**@**	*F2B-SCMAH-50M*
212	2-3/16	**@**	F2B-SCMAH-203
	2-1/4	**@**	F2B-SCMAH-204
	55mm	**@**	*F2B-SCMAH-55M*

@ Assembled to order



Series	Shaft Size	Weight lbs. kgs.	A	B	C	D	F Bolt Dia.	H	J	L	M	N
206	1	2.4	1.52	5.56	1.56	4.59	7/16	0.50	0.49	1.57	3.13	1.56
	25mm	*1.0*	*38.6*	*141.2*	*39.6*	*116.7*	*M10*	*12.7*	*12.4*	*39.9*	*79.5*	*39.6*
207	1-3/16	3.6	1.71	6.13	1.75	5.12	1/2	0.56	0.53	1.84	3.75	1.84
	1-1/4	3.5										
	30mm	*1.6*	*43.4*	*155.7*	*44.5*	*130.0*	*M12*	*14.2*	*13.5*	*46.7*	*95.3*	*46.7*
208	1-7/16	4.1	1.94	6.75	1.98	5.66	1/2	0.56	0.63	2.05	4.13	1.83
	35mm	1.9	49.3	171.5	50.3	143.8	M12	14.2	16.0	52.1	104.9	46.5
209	1-1/2	5.3	1.94	7.06	1.99	5.84	1/2	0.63	0.59	2.22	4.38	1.91
	1-5/8	5.2										
	40mm	*2.3*	*49.3*	*179.3*	*50.5*	*148.3*	*M14*	*16.0*	*15.0*	*56.4*	*111.3*	*48.5*
210	1-11/16	5.8	1.94	7.44	2.02	6.19	1/2	0.63	0.55	2.43	4.56	2.03
	1-3/4	5.6										
	45mm	*2.6*	*49.3*	*189.0*	*51.3*	*157.2*	*M16*	*16.0*	*14.0*	*61.7*	*115.8*	*51.6*
211	1-15/16	6.7	2.22	8.63	2.28	7.25	5/8	0.67	0.68	2.71	5.25	2.27
	2	6.5										
	50mm	*2.9*	*56.4*	*219.2*	*57.9*	*184.2*	*M16*	*17.0*	*17.3*	*68.8*	*133.4*	*57.7*
212	2-3/16	7.4	2.31	9.81	2.38	7.96	5/8	0.81	0.66	2.97	5.50	2.47
	2-1/4	7.2										
	55mm	*3.2*	*58.7*	*249.2*	*60.5*	*202.1*	*M22*	*20.6*	*16.8*	*75.4*	*139.7*	*62.7*