

Setscrew Ball Bearings

For over 70 years, DODGE has been talking to mounted bearing users and listening to their needs. This experience lead to the design of the optimum mounted ball bearing. A state-of-the-art facility was built to manufacture the new DODGE design.

The result is the DODGE SC/SCM/SL line. Its premium features make it the most reliable setscrew mounted ball bearing on the market and provides the user unmatched quality and true total value.

- Light Duty Narrow Inner Ring (SL)
- Normal Duty Wide Inner Ring (SC)
- Medium Duty Wide Inner Ring (SCM)
- Wide Variety of Housing Configurations
- Available in 1/2 to 3-1/2 (17 to 90mm) Bore Sizes
- Seal Options:
  - DUALGUARD seal
  - ProGuard Seal
  - Rubberized flinger
  - Low friction labyrinth on SC/ SCM
- Other Options:
  - FDA/USDA lubricant and other special lubricants
  - High temperature SC/SCM designed for temperatures from 225° F to 400° F. Factory assembled to order.

For application assistance, contact DODGE Engineering

Phone 864-284-5700

Fax 864-281-2317

DODGE End Covers

Available from stock to fit SC, SCM and VSC mounted units, these end covers are designed for added protection from contaminants as well as for OSHA requirements. Covers are OSHA yellow.

Superior Locking Forces



The DODGE SC/SCM/SL line uses 65° design which offers an optimum balance between locking force and inner ring stress.

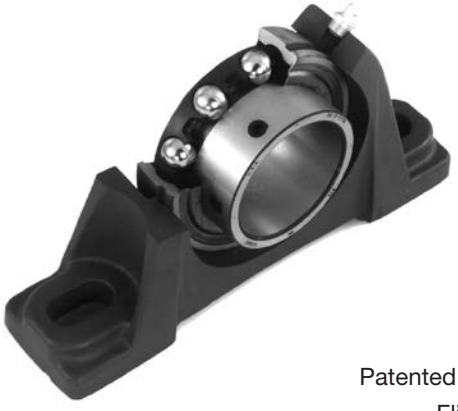

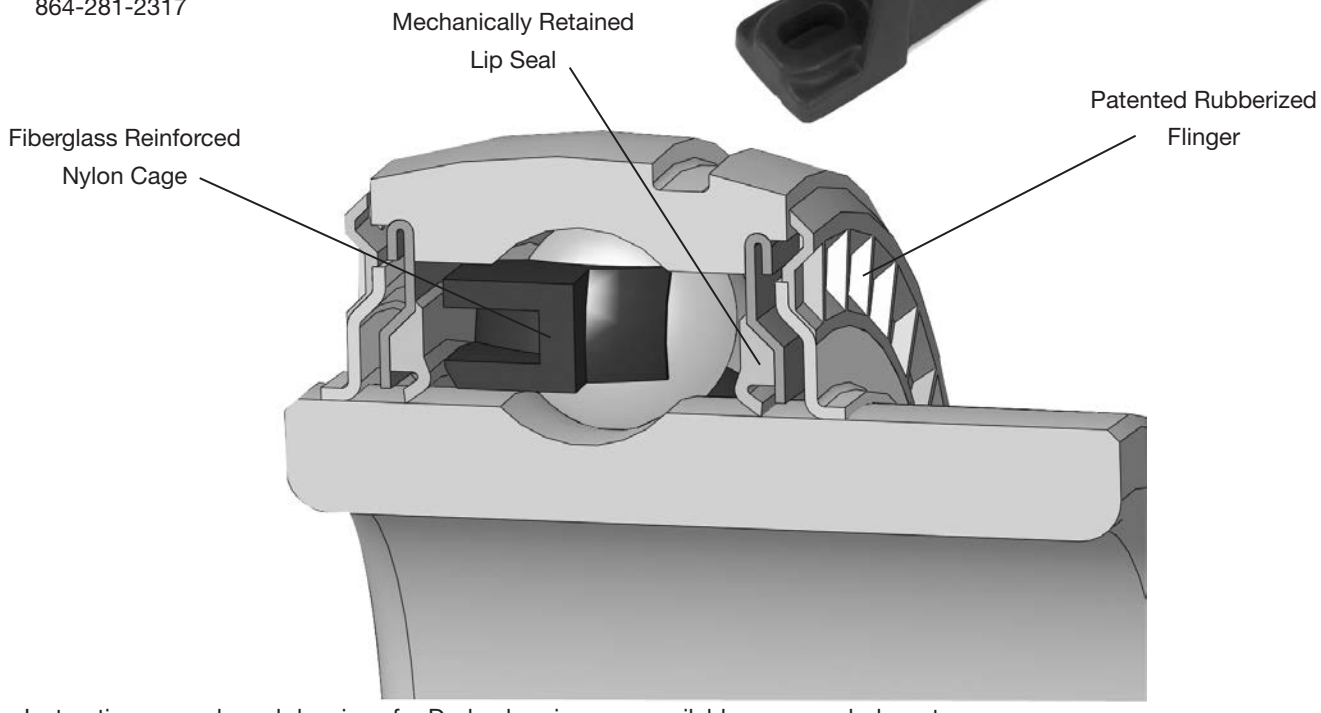

Note: Instruction manuals and drawings for Dodge bearings are available on www.dodge-pt.com

FEATURES/BENEFITS

Stronger, More Flexible Cage

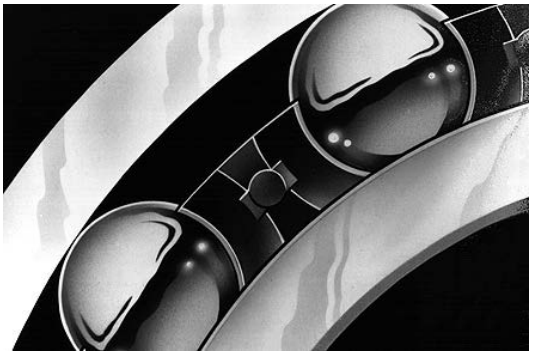

The ball cage is made of heat-stabilized nylon with 33% fill short fiberglass reinforcement for added strength. The nylon material provides a natural lubricity for longer life. Fiberglass reinforcement allows higher operating temperatures than plain nylon, yet it is more resistant to fatigue than metallic cages. Short fiberglass allows greater flexibility than steel or normal fiberglass, especially under misalignment. That means longer life in mounted bearings where some degree of misalignment is unavoidably encountered.

Anti-Rotation Pin (SC,SCM)

An anti-rotation pin prevents rotation of the outer race within the housing. Simple and effective, it makes system inserts easier to replace. There is no need to remove and replace grease fittings, location pins or other devices.



Simplified Anti-rotation device

Note: Instruction manuals and drawings for Dodge bearings are available on www.dodge-pt.com