INSTRUCTION MANUAL for DODGE® SLEEVOIL® STL Pillow Blocks and SLEEVOIL® SSL Pillow Blocks

Sizes 315/16” thru 8” PLXC

These instructions must be read thoroughly before installation or operation.

CAUTION: Do not scrape, rebabbitt or otherwise alter this product. Such action adversely affects bearing performance and may result in damage to or destruciton of equipment.

INSTALLATION:

The design of this pillow block allows the use of the PLXC liner. This is accomplished by using a “universal” grommet for the application. Complete pillow blocks are shipped in two packages, the housing and its associated parts are in one package and the liner in the other.



Liners are shipped with pipes installed. If water cooling is not required, remove the pipes and install the vented plugs. Any optional accessories are packaged separately. Before mounting the pillow block read all instructions in this manual to become familiar with the mounting procedure and pillow block parts nomenclature. All instructions in this manual pertain to both standard (STL) and short series (SSL) pillow blocks with the exception of step 8 following which does not apply to SSL style bearings.

1. Check mounting structure making sure it is rigid, level and well supported. Inspect shaft to ensure it is smooth (32 micro-inch finish or better), free of burrs or rough spots, clean shaft in the bearing area. Standard shaft tolerance should be +.000/-.002 on all sizes unless otherwise specified on shaft detail.
2. Disassemble and thoroughly clean all parts of the pillow block. Housing caps and liner caps are matched to their bases and are not interchangeable. Housings and liners can be interchanged as assemblies only.

CAUTION: Parts can be easily damaged. Liner assembly has critical machined surfaces which are easily damaged. Use care in handling to protect these surfaces. Liner parts should be placed on a soft, CLEAN surface.

WARNING: Rotating parts can cause injury to persons and damge to property. Because of the possible danger to person(s) or property from accidents which may result from the improper use of products, it is important that correct procedures be followed. Products must be used in accordance with the engineering information specified in the catalog. Proper installation, maintenance and operation procedures must be observed. The instructions in the instruction manuals must be followed. Inspections should be made as necessary to assure safe operation under prevailing conditions. Proper guards and other suitable safety devices or procedures as may be desirable or as may be specified in safety codes should be provided, and are neither provided by Baldor Electric Company nor are the responsibility of Baldor Electric Company. This unit and its associated equipment must be installed, adjusted and maintained by qualified personnel who are familiar with the construction and operation of all equipment in the system and the potential hazards involved. When risk to persons or property may be involved, a holding device must be an integral part of the driven equipment beyond the speed reducer output shaft

CAUTION: Care should be taken when reinstalling coolant pipes to avoid bearing and liner damage. Over tightening may result in liner damage. Use pipe sealant and tighten securely.

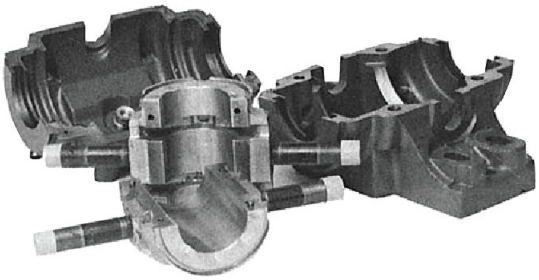

3. Position housing base on pedestal so that oil gage is in the position specified on the construction drawing. Also check construction drawings for special modifications on housing and/ or liner. Do not tighten housing base to pedestal. Apply oil to the spherical seats in the housing base. Because of the closely controlled liner to housing fit, it may be necessary to bolt the housing base down to allow the lower liner to slip into the housing seat in Step 4. Therefore, do a preliminary alignment check at this point (See Step 6).

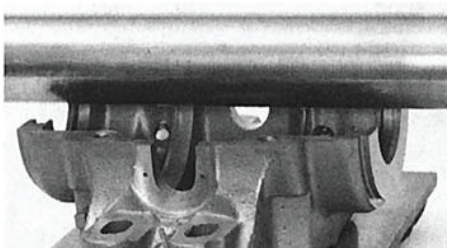

4. Note location of thermocouple holes in liner base. Set liner base in housing base so that thermocouple holes in housing align with holes in liner. Thermocouple holes in housing base are opposite the side of housing marked “X.” Apply oil to liner bearing surface. Note: Liner has been machined to close tolerances. Scraping of bore is not recommended. It may be necessary to bolt housing base down to seat liner as noted in Step 3.

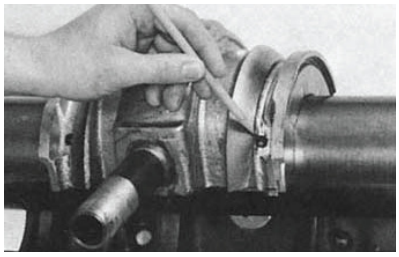

5. Apply oil to shaft in the bearing area and set shaft in place.
6. Check alignment of pillow block by noting clearance between housing and shaft at each end of the housing — clearance should be uniform within 1/32”. Shim bearing pedestal where possible, otherwise use full length shims under base

DODGE®

as required. Alignment of pillow block should be as accurate as possible. The self-alignment feature of the unit is to compensate for normal shaft deflection and possible settling of the supports.

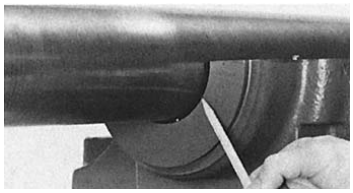

7. Dissassemble oil ring halves by removing all screws. Leaving screws in place to use as a hinge may result in damage of the ring clip. Place oil ring around outside of lower liner and over shaft.

   Carefully reassemble oil ring with all 4 screws.

   Peen screws to ensure that they are secure.

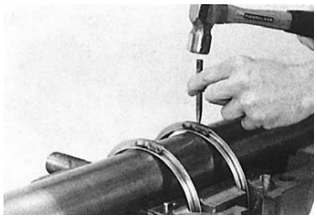

   Make sure rings rotate freely on shaft.

   NOTE: If pillow block is to be arranged for circulating oil, read section headed "Circulating Oil."

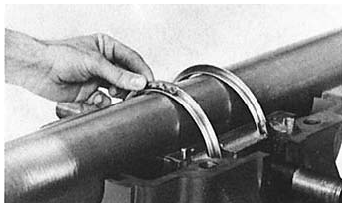

   Step 8 does not apply to short series (SSL) style pillow blocks (and where integral collars are used).

8. **Thrust Collars** in a fixed unit, should now be installed. Remove clamp screws from thrust collars and clean cracked joint with wire brush. Back off set screws to clear inside of collar.

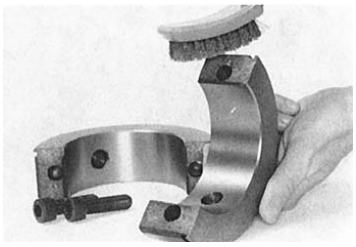

   Place one collar half on shaft so that flinger groove is next to liner base in the nonexpansion (fixed) bearing.

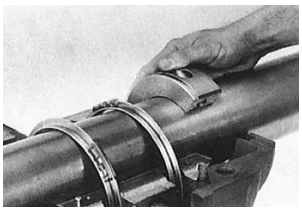

   Rotate collar half around shaft and place other half in position. Bring halves together at joint, making sure match at joint is perfect, and insert clamp screws. There should be no offset at collar face. Tap halves together and torque clamp screws to value given in Table 1. Repeat this operation for opposite end of bearing.

   NOTE: Assemble two collars on one bearing only.

Table 1 - Collar and Plunger Screw Torque Values

STANDARD SLEEVOIL SIZE	COLLAR				PLUNGER SCREW	
	CLAMP SCREW		SET SCREW			
	SCREW SIZE (SOC. HEX)	WRENCH TORQUE (IN.-LBS.)	SCREW SIZE (SOC. HEX)	WRENCH TORQUE (IN.-LBS.)	WRENCH SIZE (IN.-LBS.)	WRENCH TORQUE (IN.-LBS.)
3-15/16	1/2-13NC	1425	3/4-10NC	1750	3/8	850
4-7/16	1/2-13NC	1425	3/4-10NC	1750	1/2	1250
4-15/16	1/2-13NC	1425	3/4-10NC	1750	1/2	1250
5-7/16	1/2-13NC	1425	3/4-10NC	1750	1/2	1250
6	5/8-11NC	2800	7/8-9NC	3500	5/8	2500
7	5/8-11NC	2800	7/8-9NC	4100	5/8	2500
8	3/4-10NC	5000	1-8NC	5000	5/8	2500

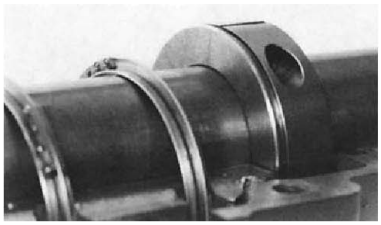

   Tap collar up to face of liner allowing a total of .008" to .014" on sizes 3-15 /16 and 4-7 /16, and .010" to .016" on sizes 4-15 /16" through 8".

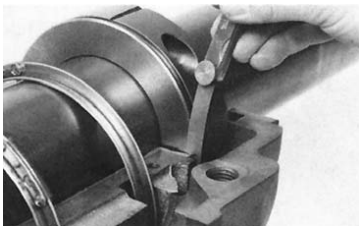

   Tighten (Soc. Hex) set screws on both collars to torque specified in Table 1. Collars should run parallel to end faces of liner within .002".

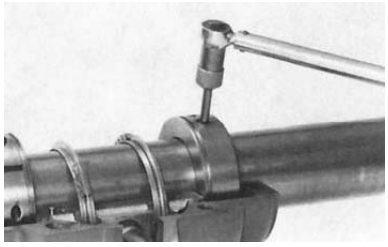

9. Apply oil to bearing surface of liner cap. Locate cap in place on lower liner making sure oil rings are in their cavities and are free to rotate.

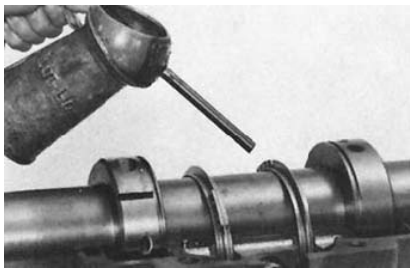

   Install and torque liner cap screws to value given in Table 2.

NOTE: If liner cap does not seem to fit properly, ensure match marks are aligned and try again.

These SLEEVOIL liners have match marks permanently stamped at the joint near one end starting in June of 1988. These match marks permanently ensure parts stay paired and critical orientation of assemblies is maintained.

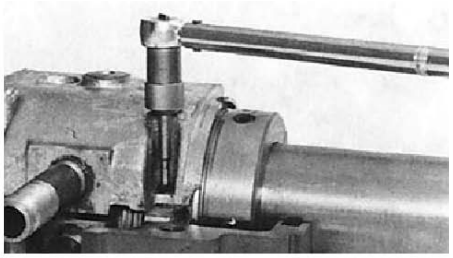

10. Tighten housing base to pedestal. Torque bolts to value given in Table 2.

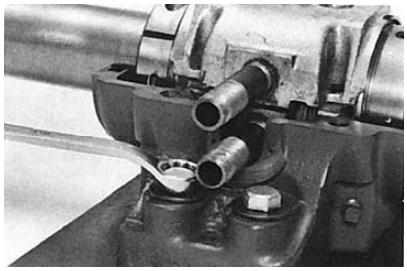

Table 2

STANDARD SLEEVOIL SIZE	LINER CAP SCREWS		HOUSING MTG. BOLTS	
	SCREW SIZE	TORQUE (IN.-LB)	BOLT SIZE	TORQUE (IN-IB.)
3-15/16	5/16-18	132	7/8	2040
4-7/16	5/16-18	132	1	3000
4-15/16	3/8-16	240	1	3000
5-7/16	3/8/16	240	1-1/8	4200
6	1/2-13	600	1-1/4	6000
7	1/2-13	600	1-1/2	10000
8	1/2-13	600	1-3/4	11500

11. Thread dust seal and seal retainer into groove at end of housing base and around shaft. Slide free end of seal retainer through clasp and pull tightly.

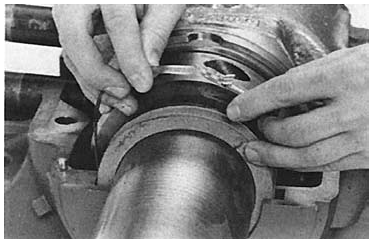

Hold clasp with screwdriver and pull free end of retainer as tightly as possible with pliers. After tightening, it should be difficult to move seal from side to side. Cut off excess material.

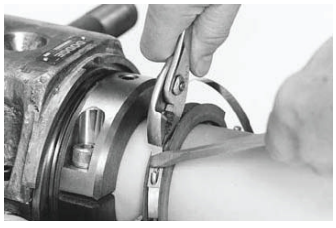

Aluminum seals, when specified for the application, are packaged separately. When using aluminum seals, discard standard (cork) seals and seal retainers pack-aged with the housing. To install aluminum seals, wrap the O-ring (rubber cord) around the shaft in the seal area and cut it to fit the shaft. For most effective sealing, ends of O-ring must meet. Cementing the ends together is recommended. Disassemble one seal and place one half on shaft over the O-ring installed. Locate O-ring in seal groove and rotate seal half around shaft into housing base groove. Install other half of seal and tighten clamp screws to torque listed in Table 3. Install second seal in same manner. If using End Closure, install neoprene disc(s) at this time. Consult construction drawing for type of seal recommended.

12. We have replaced SLEEVOIL housing gaskets with 515 Gasket Eliminator. Apply Gasket Eliminator to SLEEVOIL housing base along outer contour of joint.

NOTE: Special care should be taken at grommet area.

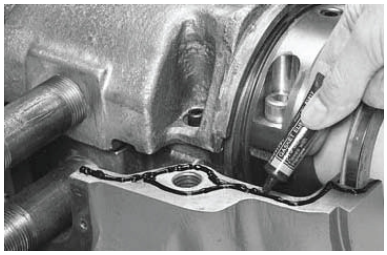

Back off plunger screw and locate housing cap on base taking care not to damage dust seals or gasket material.

Tighten housing bolts to torque given in Table 3. To reduce chances for leakage, a non-hardening sealant must be used under cap bolts.

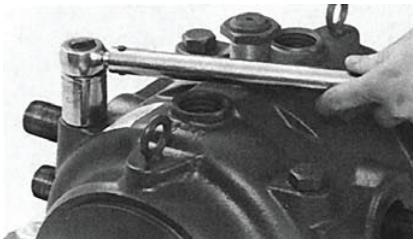

The plunger screw must be loose until the housing bolts have been tightened. Tighten plunger screw to torque given in Table 1. These SLEEVOIL housings have match marks permanently stamped on the water pipe grommet pad starting in June of 1988. These match marks permanently ensure that parts stay paired and critical orientation of assemblies is maintained.

Cap Loaded Bearings: If shaft must be held down to install cap, tighten plunger screws tightly with shaft held down. Mark position of plunger screw. Loosen plunger screw one complete turn and loosen shaft hold down. Then tighten plunger screw while tightening shaft holddown until plunger screw is tightened to the mark. Do not over-tighten shaft hold-down as this can misalign the bearing. Remove shaft hold-down and tighten plunger screw locknut. Note: Do not tighten plunger screw on accompanying base loaded bearing until cap loaded bearing has been installed and hold down removed.

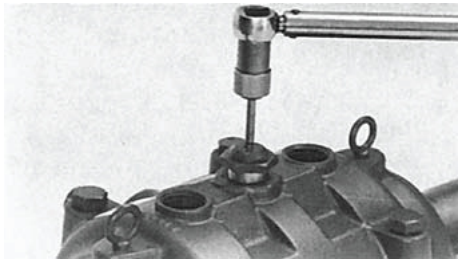

Base Loaded Bearings: Tighten plunger screw locknut.

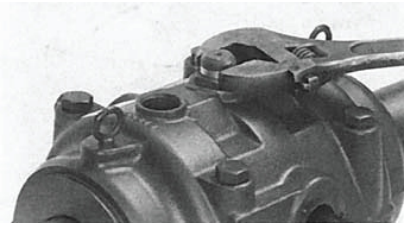

IMPORTANT: Check and re-torque plunger screw to the specificed torque after 24 hours or initial start-up and then check periodically as required.

13. Plain Liner Replacement: When using a Plain Liner, remove pipes from PLXC liner assembly and install vent plugs, install grommet and grommet plate over openings in the sides of the housing. To reduce chances for oil leakage, a non-hardening sealant may be used.

Table 3

STANDARD SLEEVOIL SIZE	HOUSING CAP BOLTS		SEAL CLAMP SCREWS	
	BOLT SIZE	TORQUE (IN.-LB)	THREAD SIZE	TORQUE (IN.-LB)
315/16	3/4-10	1900	10-24	12
47/16	7/8-9	1700	10-24	12
415/16	7/8-9	1700	10-24	12
57/16	1-8	2600	1/4-20	33
6	1-8	2600	1/4-20	33
7	11/8-7	3600	5/16-18	65
8	11/8-7	3600	5/16-18	65

Externally Cooled Liner: XC liners can be air, water or oil cooled; check drawing for details. When PLXC Liners (with coolant pipes) are to be used, install grommet and grommet plate over pipes and tighten screws. Apply a non-hardening sealant to pipes, housing grommet area and between grommet and grommet plate to reduce chance of oil leakage. PLXC liners replace both older plain and XC styles.

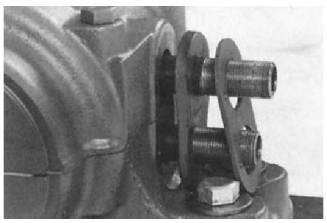

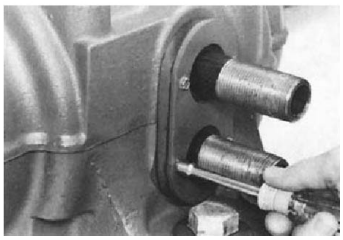

14. The oil level gauge may be located any distance from the pillow block by the use of a coupling and pipe of the desired length. The extended pipe must be supported so that it remains straight and perfectly level. Use a spirit level — do not guess. Use pipe sealer on all connections.

NOTE: If bearing is to be arranged for circulating oil, discard oil level gauge.



15. Remove all pipe plugs and flush liner bore and housing thoroughly with solvent or cleaner. Reinstall pipe plugs using pipe sealer. Tighten securely.

16. Check construction drawing and/or equivalent manual to determine if coolant pipes are to be connected. If no connection is required, pipes can remain open. Otherwise, make pipe connections required for coolant, making sure that all pipe lengths are correct and unions are well aligned. Careless fitting will result in serious pre-loading of bearing. Lengths of flexible hose between pil-low block and rigid piping are recommended to avoid pre-loading of bearing. If water or glycol is used for coolant, the flexible hose can be of reduced size. A regulating valve should be placed ahead of the inlet and a sight drain at the outlet for liquid coolants. The recommended method of pipe connection for liquid coolants is to con-nect the inlet to one pipe and the outlet to the other pipe on the same side of the bearing. A return is then used to connect the two pipes on the other side of the bearings (See illustration). Adjust coolant flow rate specified on construction drawing or to suit conditions (See Table 4). When using air as the cooling medium, connect an inlet to each pipe on one side of the bearing and an outlet to the pipes on the other side.

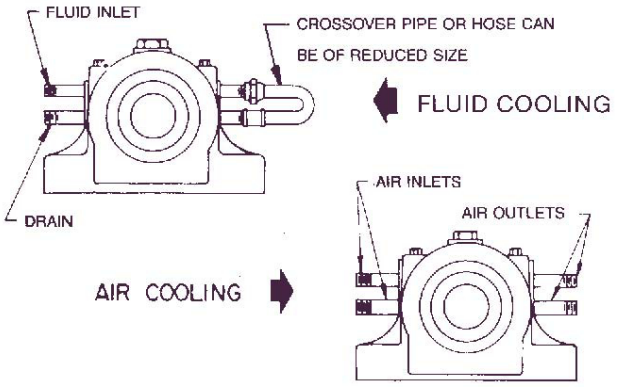

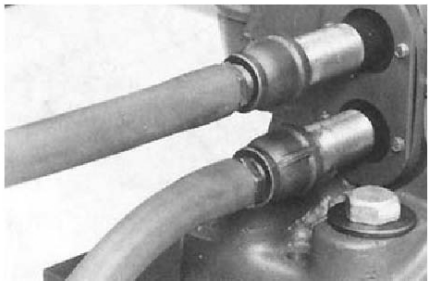

17. Each housing base has predrilled holes for doweling bearing to base plate.

LUBRICATION and OPERATION

Since the satisfactory operation of the pillow block depends almost entirely on the oil film being maintained between the shaft and liner bearing surface, it is recommended that a high grade straight mineral oil with rust and oxidation (R & O) inhibitors and anti-foam agents be used. Check equipment specifications for specific recommendation of oil viscosity by equipment manufacturer. If no viscosity is recommended, the following chart can be used as a guide. Information regarding qualities and properties of specific oils should be referred to the lubri-cant manufacturer.

Recommended Oil Viscosity If not specified by equipment manufacturer		
Ambient Temp. Fahr. During Start Up	Speed	SAE/ISO Oil Required
Below –10°	All	Consult Equipment Manufacturer
–10° to 32°	All	SAE 10/ISO32
32° to 70°	Low High	SAE 20/ISO68 SAE 10/ISO32
Above 70°	High	SAE 10/ISO32 for Light Loads SAE 20/ISO68 for Heavy Loads

Use high grade, high quality, well refined petroleum oils of the straight mineral type with rust and oxidation inhibitor and anti-foam agent only.

Approximate viscosity:
SAE 10 —183 SUS at 100°F; 46 SUS at 210°F
SAE 20 —348 SUS at 100°F; 57 SUS at 210°F
SAE 30 —489 SUS at 100°F; 65 SUS at 210°F
ISO32 —158 SUS at 100°F; 44 SUS at 210°F
ISO68 —335 SUS at 100°F; 55 SUS at 210°F
ISO100 —495 SUS at 100°F; 66 SUS at 210°F

Oil film temperature in liners during normal operation should not exceed 180°F. If in doubt, consult equipment manufacturer.

Low ambient and operating temperatures can be as harmful to the bearing as high temperatures. A heater and thermoswitch would be required for such applications.

Fill the pillow block with oil to the top of the center circle in the oil gauge.





After placing into operation, remove inspection covers and check to make sure oil rings are bringing up oil. Operation should be checked frequently during the first few days. After some running of base loaded bearings only, loosen plunger screw 1/4 turn, then retighten to spec-ified torque. This will allow the liner to align with the shaft. For cap loaded bearings, follow installation procedure. If noise develops, check alignment of housing, collar runout, plunger screw and all operating parts. Check all points and make sure all screws and nuts are tightened after several days operation. Maintain oil level at center of oil gauge at all times while unit is in operation.

Oil Maintenance Schedule

Drain, flush, and refill with oil after 2 to 3 weeks of initial break-in operation. Since the satisfactory operation of the bearing depends entirely on an oil film being maintained between the shaft and the bearing liner surface, it is recommended that an oil analysis be performed at these regular intervals.

- Every 3 months for 24 hour/day service
- Every 6 months for 8 hour/day service

Acceptability of oil should be referred to the lubricant manufacture. If oil quality is acceptable then repeat this procedure in 3 month intervals. Visually check oil for contamination between oil analysis checks. Oil service life depends upon several factors such as ambient condi-tions, operating temperature and frequency of bearing starts and stops. It is recommended that the oil be changed at least once per year for unfiltered static appli-cations. Removing contaminants through the use of either the OLF (Oil Level and Filtration) Unit or a circulat-ing oil system can extend oil service life. Consult equip-ment manufacturer for more information.

Check construction drawing for proper coolant flow rate. If not given, use flow rate shown in the following table as a general starting point for proper cooling. Lower coolant inlet temperature and (or) lower ambient temperature require less flow. If the coolant inlet temperature exceeds 90°F additional coolant will be required. Anti-freeze type additives may be used with the water in cold operating environments, otherwise purge all coolant from the liner by blowing out with compressed air or steam anytime bearing coolant is subject to freezing.

Any questions on installation, maintenance or operation should be referred to the equipment manufacturer.
CAUTION: High air pressure may damage equipment. The fluid or air pressure should never exceed 120 p.s.i.

Table 4

Pillow Block Size	Max. Speed for Ring Oiling (RPM) ①	Normal Water Flow Rate (GPM) ②	Normal Air Flow Rate (CFM) ③	Pressure Drop Req'd. for Air Cooling (PSI) ④	Oil Flow Rate for Circ. Oil (GPM) ④	Oil Volume⑥		
						Fl. Oz. ⑦	Qts. Approx. ⑦	Liters Approx. ⑦
3-15/16	2910	1.75	52	.19	3.0	50	1-1/2	1.45
4-7/16	2582	2.25	63	.22	3.5	64	2	1.90
4-15/16	2321	2.50	77	.11	3.5	90	2-3/4	2.70
5-7/16	2107	3.00	90	.12	5.0	100	3-1/8	2.95
6	1910	4.00	104	.18	5.5	132	4-1/8	3.90
7	1637	5.00	156	.40	6.5	240	7-1/2	7.10
8	1432	6.50	173	.50	7.5	320	10	9.50

① Converted from 3000 FPM. Speeds above 3000 require Circulating Oil.
② Based on 90°F ambient temperature and 90°F water inlet temperature. Cooler ambient and (or) water inlet temperatures require less flow. Pressure drop across bearing — Approx 1 PSI.
③ Based on 90°F ambient and 90°F air inlet temperatures. Cooler ambient and (or) air inlet temperatures require less flow.
④ Minimum back pressure required for proper air circulation through the liner coolant chambers.
⑤ Flow rate required at 120°F oil inlet temperature, 90°F ambient temperature and at 6000 fpm shaft speed under maximum radial load. Slower speeds and lighter loads require less flow.
⑥ Volume of oil required to fill pillow block to top of center circle in oil gage. Applies to both XC and Plain Pillow Blocks.
⑦ 32 fl. oz. = 1 qt = 94636 liters.

OPTIONS

Thermocouple. A thermocouple is used to sense the temperature of the pillow block liner in the shaft area, andif a pre-set thermal limit is exceeded it can trigger a warning or, if desired, send a signal to disconnect electrical power to the motor.

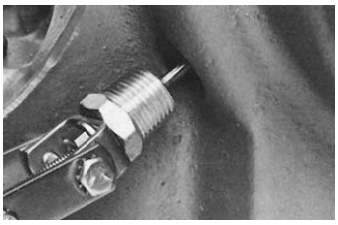

Two 1/2-14 N.P.S.F. threaded holes on the side opposite the "X" marking have been provided as a standard means of thermocouple mounting. Also furnished with the pillow block is a 1/2" x 1/8" adapter bushing to allow adaption of thermocouples from several manufacturers. Spring loaded thermocouples are recommended for positive contact.

Install the thermocouple in the location shown on the construction drawing. Make certain the probe extends into the liner thermocouple hole. For non-expansion bearing, the thermocouple should be located in the hole nearest to the end carrying the thrust load. When the direction of the thrust load is not known, two thermocouples are recommended. For expansion bearings, the thermocouple can be located at either end. Depending on thermocouple and bearing size it may be necessary to employ a system of pipe nipples and couplings to achieve proper probe penetration and housing clearance. Use sealant on all threaded connections including thermocouple mounting thread. Apply sealant to the pipe plug furnished and install it in the other hole.

Thermostat and Immersion Heater. An immersion heater is used to maintain a minimum oil temperature in the pillow block. The thermostat, used in conjunction with the heater, monitors oil temperature in the pillow block and regulates the immersion heater. If the pillow block has been machined for a heater and thermostat, the threaded mounting holes are usually located in the end face of the housing base. Install heater and thermostat using sealant on all threaded connections to prevent oil leakage.

CAUTION: Heater can be damaged. Turn off heater before filling or drawing oil from pillow block. Heater will overheat when not submerged in oil.

WARNING: Risk of shock. When installing heater and Thermoswitch, follow directions and safety procedures recommended by the manufacturer. Install wiring in accordance with the National Electric Code and local codes.

Circulating Oil. If the housing has been arranged for circulating oil, the inlets are located in the housing cap. Pipes extend through the housing cap and are directed toward the inspection holes in the liner. The standard drain arrangements are shown at bottom of page. Consult manufacturer's drawing for exact dimensions and location of drain(s).

Install oil supply lines to the 1/4" N.P.T. external (male) threaded inlets so that each inlet will receive an equal amount of oil. Make sure that the oil flows from the pipes directly into the inspection holes. Drain piping should be vented and of adequate size to drain oil from the bearing at the specified flow rate. The housing drain must be directed straight down into a return drain sloping away at a 15 degree or greater angle from the horizontal. The oil-ing system must have a means of filtering the oil to remove any contaminating particles. A 25 micron filter or better is recommended. When baffles are installed in oil ring grooves of upper liner, oil rings cannot be used and should be discarded. Bend baffle so that free end rests on lower liner joint. Since the housing drain is arranged to maintain the proper oil level, then oil rings may be used as a safety measure or back-up oiling system without oil baffles.

NOTE: Auxillary seals are recommended for outdoor applications, contaminated atmospheres, and high volume of air flowing over the bearing.

NOTE: Bearings should NOT be stored outdoors before installation. For extended or outdoor storage, contact equipment manufacturer for special precautions against corrosion.

NOTE: Bearings (and shafts) allowed to set idle for extended periods after being run MUST be protected against corrosion. If the unit can not be run for several minutes at least once a week, consult equipment manufacturer for special lubrication instructions.

STL PL PB **SSL PL**

PB

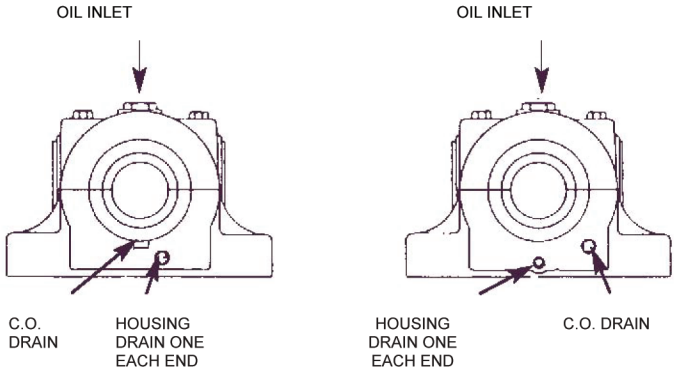

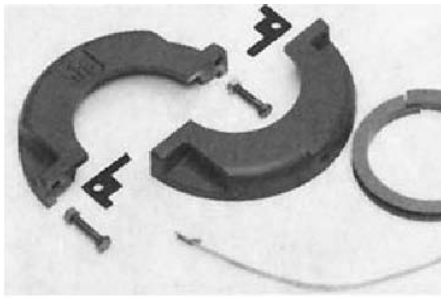

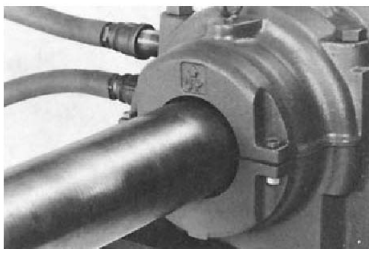

End Closure Kits and Auxiliary Seal Kits are available and may be added at any time without any machining to the pillow block. Refer to the instructions packaged with the kits for installation details.

NOTE: The two-digit numbers are for reference only. Order these SLEEVOIL pillow blocks and liners by the six-digit part numbers in the Parts List. Each six-digit number is a complete identification of the part or assembly.

These SLEEVOIL pillow blocks and liners have nameplates attached starting in June 1988 identified by a six-digit part number which fully identifies the housing and/or liner. Liner nameplates are pinned to the SLEEVOIL liner cap near an oil ring inspection hole. Housing nameplates are pinned to the housing foot parallel to the shaft. Refer to these part numbers when ordering replacement parts.

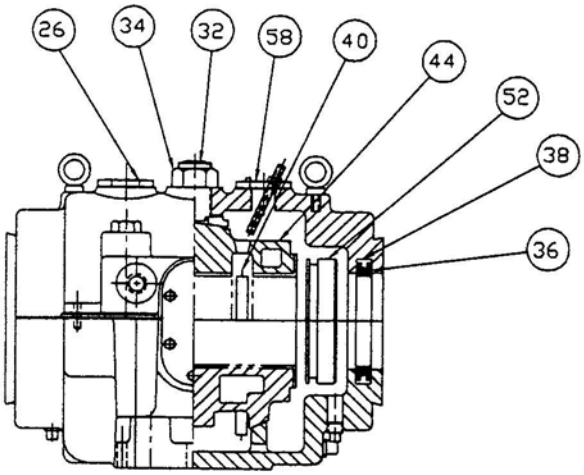

PLAIN PILLOW BLOCK

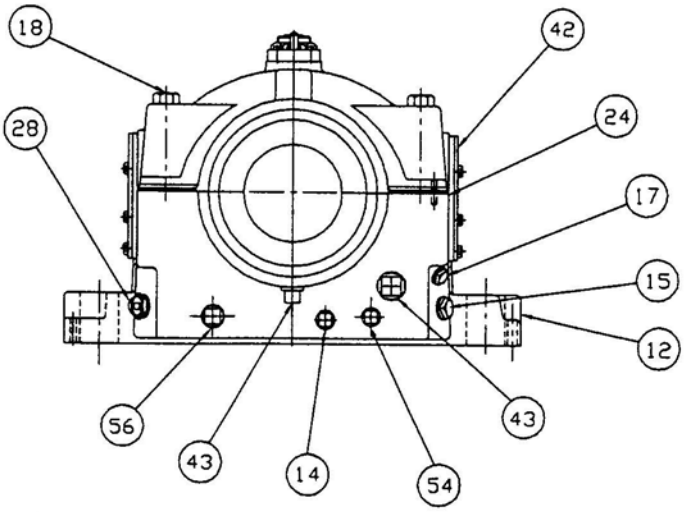

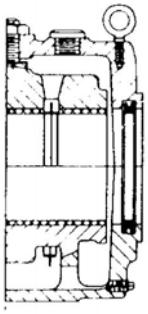

SHORT SERIES
(PLAIN AND PLXC)
END BELL
CONFIGURATION

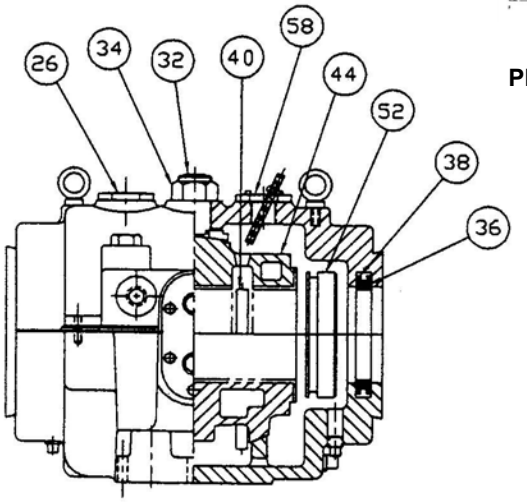

PLXC PILLOW BLOCK

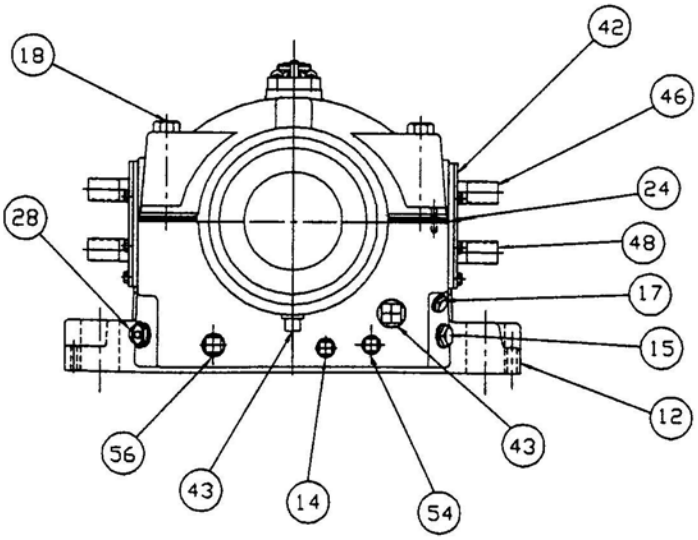

SLEEVOIL STL AND SSL PILLOW BLOCKS

Item	Description	No. Req'd	Replacement Part Numbers						
			3-15/16"	4-7/16"	4-15/16"	5-7/16"	6	7	8
③	STL PLXC Non-Exp. PB ⑨	1	134222	134223	134224	134225	134226	134227	134228
	STL PLXC Exp. PB ⑩	1	134200	134201	134202	134203	134204	134205	134206
③	SSL PLXC Exp. PB ⑩	1	134207	134208	134209	134210	134211	134212	134213
③	STL Modular HSG⑥	1	132782	132783	132784	132688	132689	132690	132691
③	SSL Modular HSG⑥	1	132718	132719	132720	132920	132921	132922	132923
12	STL HOUSING MACH	1	132779	132780	132781	132663	132664	132665	132666
③	SSL HOUSING MACH	1	132739	132740	132741	132930	132931	132932	132993
14	② Drain Plug	1	430012	430012	430012	430012	430012	430012	430012
15	② Oil Level Plug	1	430012	430012	430012	430014	430014	430014	430014
17	② Thermocouple Plug	2	430012	430012	430012	430012	430012	430012	430012
③	② Thermocouple Adapter	1	430081	430081	430081	430081	430081	430081	430081
18	② Housing Bolt	4	411190	411196	411197	411205	411207	411226	411227
24	② Gasket Eliminator	1	427359	427359	427359	—	—	—	—
26	② Gasket Eliminator	2	—	—	—	427359	427359	427359	427359
28	② Inspection Cover	2	432197	432199	432199	432199	432199	432199	432199
32	② Oil Gage	1	430139	430139	430139	430135	430135	430135	430135
	② Plunger Screw Assembly	1	390522	390523	390524	390525	390571	390572	390572
34	② Plunger Screw Locknut	1	133368	133369	133369	133369	133369	133369	133369
36	② Dust Seal	2	133567	133568	133549	133614	133616	133617	133618
38	② Seal Retainer	2	133579	133579	133579	133579	133579	133579	133579
40	② Oil Ring	2	130056	130057	130058	130059	130060	130062	130065
42	② Grommet Kit	1	132192	132192	132193	132193	132198	132198	132198
43	② Circulating Oil Drain Plug (STL)	2	430014	430014	430016	430016	430016	430017	430017
	② Circulating Oil Drain Plug (SSL)	2	430014	430016	430017	430017	430017	430017	430017
③	Auxiliary Seal Kit	2	432181	432184	432187	133932	133933	133937	133938
③	Housing End Cap Kit	1	432190	432193	432196	132546	132547	132548	132549
③	Circulating Oil Grommet Kit	1	432153	430198	430198	430155	430155	430155	430155
44	② PLXC LINER ASSEMBLY ⑤	1	132952	132953	132954	132955	132956	132957	132958
46	② Water Pipe—Upper Liner Half	2	430171	430171	430174	430174	430176	430176	430177
48	② Water Pipe—Lower Liner Half	2	430171	430171	430174	430174	430176	430176	430177
③	② Dowel Pin	2	420053	420053	420064	420064	420080	420080	420080
③	② Liner Cap Screw	2	417084	417084	417117	417114	417184	417184	417184
③	② Vented Plug Kit	1	462996	462996	462997	462997	462997	462997	462997
52	Thrust Collar⑥	2							
54	② Thermostat Plug	1	133285	133292	133293	133294	133295	133296	133297
③	Thermostat	1	430012	430012	430012	430012	430012	430012	430012
56	② Heater Plug	1	133116	133116	133116	133116	133116	133116	133116
③	Heater	1	430014	430014	430014	430014	430016	430016	430017
24	DUST SEAL KIT	1	389828	389829	389830	389831	389832	389833	389834
36	② Gasket Eliminator	1	427359	427359	427359	—	—	—	—
38	② Dust Seal	2	133567	133568	133549	133614	133616	133617	133618
24	② Seal Retainer	2	133579	133579	133579	133579	133579	133579	133579
	② Gasket Eliminator	2	—	—	—	427359	427359	427359	427359
OPTIONAL ACCESSORIES									
③	Auxiliary Seal Kit	2	432181	432184	432187	133932	133933	133937	133938
③	Housing End Cap Kit	1	432190	432193	432196	132546	132547	132548	132549
58	Circulating Oil Grommet Kit	1	432153	430198	430198	430155	430155	430155	430155

① Both Housings include all parts immediately following and a two piece housing.
② These parts make up the assemblies under which they are listed.
③ Not shown on drawing.
④ One grommet kit consists of 2 rubber grommets — 2 grommet plates and 8 grommet screws.
⑤ Liner Assemblies also include a 2-piece liner. PLXC liners replace both older plain and XC styles.
⑥ 2 required for one non-expansion (fixed) pillow block. Includes all hardware required for mounting. Cannot be used with SSL style Pillow Blocks.
⑦ For SLEEVOIL SSL housing only.
⑧ Plunger Screw Assembly consists of 1 plunger screw, 1 washer and 1 button assembled together.
⑨) STL PLXC Non-Expansion Pil Blk includes Modular HSG, Liner Assy and (2) Split Thrust Collars.
⑩ STL PLXC Expansion or SSL PLXC Expansion Pil Blk includes Modular HSG and Liner Assy.

BALDOR®

A MEMBER OF THE ABB GROUP

P.O. Box 2400, Fort Smith, AR 72902-2400 U.S.A., Ph: (1) 479.646.4711, Fax (1) 479.648.5792, International Fax (1) 479.648.5895

Dodge Product Support

6040 Ponders Court, Greenville, SC 29615-4617 U.S.A., Ph: (1) 864.297.4800, Fax: (1) 864.281.2433

www.baldor.com

© Baldor Electric Company
MN3057 (Replaces 499969)

3057-0811

All Rights Reserved. Printed in USA.
8/11 PRINTSHOP 1000