SELECTION/DIMENSIONS

Eccentric Collar Ball Bearings
TYPE GXR NORMAL DUTY TOP ANGLE TAKE-UP BEARINGS

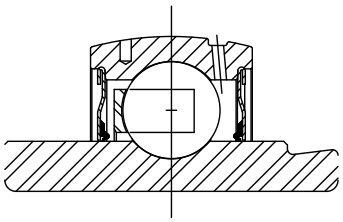

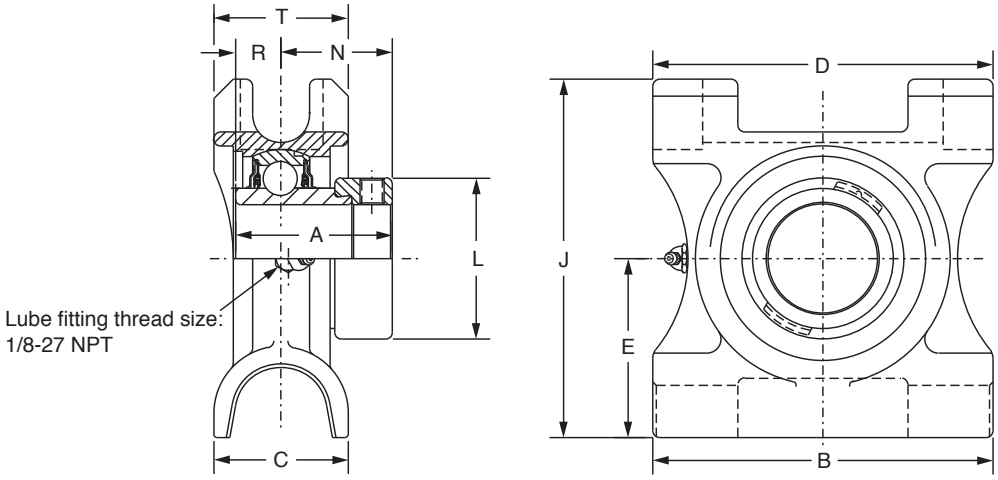

Series	Shaft Size	Part No.	Description
210	1-15/16	**131536**	TP-GXR-115
	2	**131537**	TP-GXR-200
211	2	**@**	TP-GXR-200L
	2-3/16	**131540**	TP-GXR-203
212	2-1/4	**131542**	TP-GXR-204
	2-7/16	**131545**	TP-GXR-207
215	2-15/16	**@**	TP-GXR-215

@ Assembled to order

Series	Shaft Size	Weight lbs	Take-Up Frame Size	A	B	C	D	E	J	L	N	R	T
210	1-15/16 2	10.2 10	TP10	2.25	6.50	2.38	6.00	3.25	6.38	2.75	1.50	0.75	2.38
211	2 2-3/16	13.2 13	TP20	2.59	7.00	2.50	6.75	3.38	7.88	3.00	1.71	0.88	2.38
212	2-1/4 2-7/16	16.2 16.0	TP30	2.74	7.50	2.75	7.00	3.50	7.44	3.31	1.84	0.90	2.75
215	2-15/16	21.8	TP40	3.02	8.50	2.50	8.00	4.00	8.31	4.00	2.07	0.95	2.75