SLEEVOIL —R Series

1-7/16″ THRU 3-7/16″ PLAIN–WATER COOLED STANDARD AND SHORT SERIES SLEEVOIL PILLOW BLOCKS

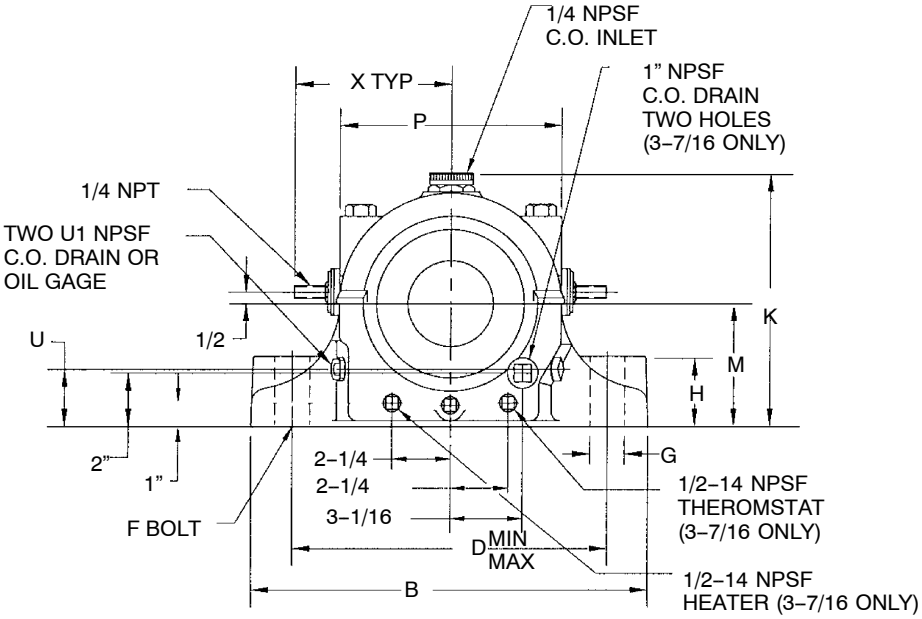

STANDARD Series

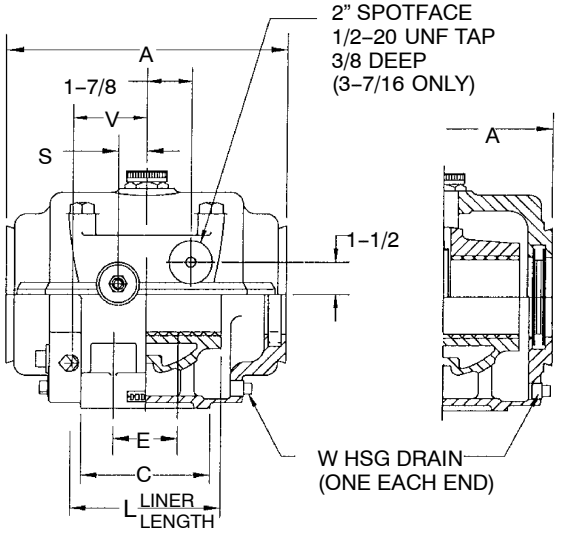

SHORT Series

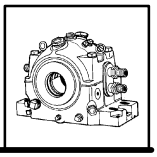

SLEEVOIL—R Series

1-7/16″ THRU 3-7/16″ PLAIN–WATER COOLED STANDARD AND SHORT SERIES SLEEVOIL PILLOW BLOCKS

Shaft Size	Non–Expansion Pillow Blocks + +		Expansion Pillow Blocks		Expansion Pillow Blocks #		Optional Accessories >>,*						Replacement PL–WC Liner Assemblies	
							Req'd. to Make-Up Non-Exp. Blks. • Split Thrust Collar		No Additional Machining Required for					
									Neoprene End Closure **		Hose Kits			
	STD		STD		SSH									
	Part Number	Wt.	Part Number	Wt.	Part Number	Wt.	Part Number	Wt.	Part Number	Wt.	Part Number	Wt.	Part Number	Wt.
1-7/16	**134214 >**	21.9	**132983 >**	20.5			**133245**	.7	**133980**	.12			**133203**	3.6
1-11/16	**134215**	33.1	**132984**	30.7	. . . . .	. . . . .	**133250**	1.2	**133981**	.12			**133583**	6.3
1-15/16	**134216**	33.6	**132985**	31.6	. . . . .	. . . . .	**133255**	1.0	**133982**	.12			**133584**	7.1
2-3/16	**134217**	51.4	**132986**	47.8	. . . . .	. . . . .	**133260**	1.8	**133883**	.12	133344	.5	**133585**	12.0
2-7/16	**134218**	70.9	**132987**	65.5	. . . . .	. . . . .	**133265**	2.7	**133984**	.12			**132959**⊗	11.6
2-11/16	**134219**⊗	98.9	**132988**⊗	97.0	. . . . .	. . . . .	**133270**	4.1	**133985**	.12			**132950**⊗	27.0
2-15/16	**134220**⊗	100.0	**132989**⊗	92.4	132991⊗	90.0	**133275**	3.8	**133986**	.18				22.0
	STL		STL		SSL									
3-7/16	**134221**⊗	156.4	**132990**⊗	144.0	132992⊗	138.0	**133280**	6.2	**133987**	.31			**132951**⊗	50.0

Shaft Size	A		B		C		D (Min.-Max.)		E		F Bolt Dia.		G	
	STD	SSH	STD	SSH	STD	SSH	STD	SSH	STD	SSH	STD	SSH	STD	SSH
1-7/16	6-1/2	. . . .	9-1/2		2-3/4	. . . .	7 — 7-1/2	. . . . . —	##		5/8	. . . .	1	. . . .
1-11/16	7-3/4	. . . .	10-1/2	. . . . .	3	. . . .	7-3/4 — 8-1/4	. . . . . —	##	. . . . .	5/8	. . . .	1	. . . .
1-15/16	7-3/4	. . . .	10-1/2	. . . . .	3	. . . .	7-3/4 — 8-1/4	. . . . . —	##	. . . . .	5/8	. . . .	1	. . . .
2-3/16	9-1/4	. . . .	12-1/2	. . . . .	3-1/2	. . . .	9-1/8 — 9-7/8	. . . . . —	##	. . . . .	3/4	. . . .	1-1/4	. . . .
2-7/16	10-1/2	. . . .	13-1/2	. . .	4	. . . .	10-1/8 — 10-7/8	. . . . . —	##	. . . . .	3/4	. . . .	1-1/4	. . . .
2-11/16	11-1/2	. . . .	15		4-1/2	. . . .	11 — 12	. . . . . —	##		7/8	. . . .	1-1/2	. . . .
2-15/16	11-1/2	8-3/4	15	15	4-1/2	5-3/4	11 — 12	10-7/8 — 12-1/8	##	2-3/4	7/8	3/4	1-1/2	1-1/2
	STL	SSL	STL	SSL	STL	SSL	STL	SSL	STL	SSL	STL	SSL	STL	SSL
3-7/16	13	10	17	17	6	6	12-15/16—14-1/16	12-15/16—14-1/16	3	3	3/4	3/4	1-1/2	1-1/2

Shaft Size	H		K		L		M		P		S		U	
	STD	SSH	STD	SSH	STD	SSH	STD	SSH	STD	SSH	STD	SSH	STD	SSH
1-7/16	1-1/2	. . . .	6	. . . .	3	. . . .	2-3/4	. . . .	4-5/8	. . . .	. . . .	. . . .	1-1/8	. . . .
1-11/16	1-3/4	. . . .	6-3/4	. . . .	3-1/2	. . . .	3-1/8	. . . .	5-3/8	. . . .	7/8	. . . .	1-3/8	. . . .
1-15/16	1-3/4	. . . .	6-3/4	. . . .	4	. . . .	3-1/8	. . . .	5-3/8	. . . .	7/8	. . . .	1-3/8	. . . .
2-3/16	2	. . . .	8	. . . .	**4-1/2**	. . . .	**3-3/4**	. . . .	**6-3/8**	. . . .	**7/8**	. . . .	**1-1/2**	. . . .
2-7/16	2-3/8	. . . .	8-3/4	. . . .	5	. . . .	4-1/8	. . . .	7-1/8	. . . .	1-1/16	. . . .	1-5/8	. . . .
2-11/16	2-15/32	. . . .	9-5/8	. . . .	5-1/2	. . . .	4-9/16	. . . .	7-7/8	. . . .	1-1/8	. . . .	1-7/8	. . . .
2-15/16	2-15/32	1-1/2	9-5/8	9-5/8	6	6	4-9/16	4-9/16	7-7/8	7-7/8	1-1/8	1-1/8	1-7/8	1-3/4
	STL	SSL	STL	SSL	STL	SSL	STL	SSL	STL	SSL	STL	SSL	STL	SSL
3-7/16	3	3	11	11	7	7	5-1/4	5-1/4	9-3/8	9-3/8	1-5/16	1-5/16	2	2

Shaft Size	U1		V		W		X	Thrust Collar Dia. x Width•	Oil (fl. oz.)
	STD	SSH	STD	SSH	STD	SSH			
1-7/16	1/2	. . . .	2-1/16	. . . .	1/4	. . . .	. . . .	2-1/2 x 7/8	6
1-11/16	1/2	. . . .	2-1/4	. . . .	1/4	. . . .	3-3/4	3 x 11/16	8
1-15/16	1/2	. . . .	2-1/4	. . . .	1/4	. . . .	3-3/4	3 x 11l/16	8
2-3/16	1/2	. . . .	2-1/2	. . . .	1/4	. . . .	4-3/4	3-5/8 x 1-1/8	10
2-7/16	1/2	. . . .	2-15/16	. . . .	1/4	. . . .	4-3/4	4 x 1-1/8	15
2-11/16	1/2	. . . .	3-1/8	. . . .	1/4	. . . .	5-1/8	4-5/8 x 1-1/2	18
2-15/16	1/2	1/2	3-1/8	3-9/16	1/4	1/4	5-1/8	4-5/8 x 1-1/4	18
	STL	SSL	STL	SSL	STL	SSL			
3-7/16	3/4	1/2	3-7/8	3-7/8	1/2	1/2	5-1/2	5–1/2 x 1-1/2	33

\# Not adaptable to non-expansion conversion.

\# # 2-bolt base.

\> Available in STD (plain) style only.

>> Not Furnished unless specifically ordered.

* A 3-7/16′ Auxiliary Seal Kit @ 4.9 lbs.(part no.132811),
A 3-7/16″ Hsg. End Cop Kit @ 5.31 lbs.(part no. 132542),
A 3-7/16′ Heater @ .50 lbs. (part no.132835) to be used with
A 3-7/16″ thermostat @ 2.0 lbs. (part no. 133116), and
A 3-7/16″ Vibration detector kit @ 5 lbs. (part no.430153).

** Used to close one end of pillow block. One required for 1-7/16′ thru 2-15/16' sizes two for 3-7/16″ size.

• Two required for each expansion block when a non-expansion block Is required. Not adaptable to Short Series (SS).

⊗ Pillow block and liner are pre-drilled for thermocouple (2 places). STL & SSL are pre-drilled for accessories: thermocouple, circulating oil, vibration detector, heater and thermostat.

+ + Non–Expansion Pillow Blocks include housing, liner and two split collars

MODIFICATIONS/ACCESSORIES
PAGE B12–34

SLEEVOIL—R Series

3-15/16″, THRU 8″, PLAIN / EXTERNALLY COOLED STANDARD AND SHORT SERIES SLEEVOIL PILLOW BLOCKS

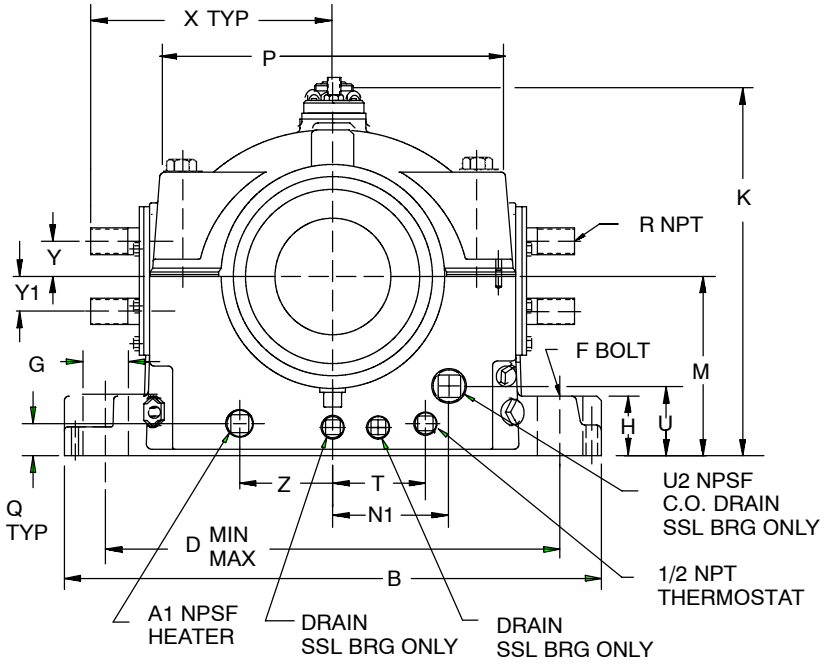

STANDARD Series

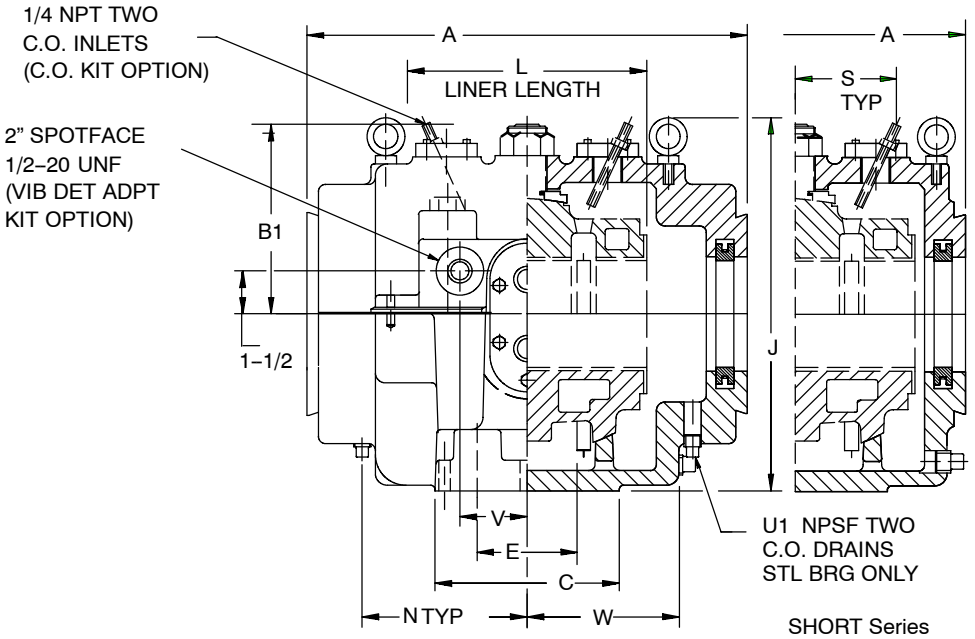

SHORT Series

FEATURES/BENEFITS PAGE B12–2	SPECIFICATIONS/ HOW TO ORDER PAGE B12–5	NOMENCLATURE PAGE B12–6	SELECTION COMPUTER PAGE B12–9

DODGE®

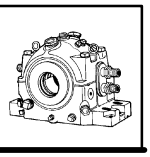

SLEEVOIL—R Series

3-15/16″, THRU 8″, PLAIN / EXTERNALLY COOLED STANDARD AND SHORT SERIES SLEEVOIL PILLOW BLOCKS

Shaft Size	Pillow Block Assemblies						Req'd To Make Up Non-Expansion Blocks> > ● Split Thrust collars		Replacement Liner Assemblies ⊗			
	Non–Expansion Pillow Blocks + +		Expansion Pillow Blocks		Expansion Pillow Blocks#				PL–XC Externally Cooled		WC Water Cooled Replacement	
	STL		STL		SSL							
	Part Number	Wt.	Part Number	Wt.	Part Number	Wt.	Part Number	Wt.	Part Number	Wt.	Part Number	Wt.
3-15/16	**134222**	215	**134200**	201	**134207**	193	**133285**	7.2	**132952**	51	**133590**	54
4-7/16	**134223**	287	**134201**	271	**134208**	255	**133292**	7.9	**132953**	71	**133591**	65
4-15/16	**134224**	385	**134202**	362	**134209**	324	**133293**	11.3	**132954**	92	**133592**	91
5-7/16	**134225**	495	**134203**	470	**134210**	462	**133294**	12.3	**132955**	130	**133593**	114
6	**134226**	629	**134204**	598	**134211**	570	**133295**	15.3	**132956**	158	**133594**	158
7	**134227**	944	**134205**	882	**134212**	845	**133296**	31.3	**132957**	230	**133595**	216
8	**134228**	1395	**134206**	1298	**134213**	1256	**133297**	48.7	**132958**	372	**133596**	375

Shaft Size	Optional Accessories > > *										Pipe Grommet Kits >	
	Auxiliary Seal Kits ##		Housing End Cap Kits		Heater		Circulating Oil Inlet Kits >		Neoprene End Closures ⊗⊗			
	Part Number	Wt.	Part Number	Wt.	Part Number	Wt.	Part Number	Wt.	Part Number	Wt.	Part Number	Wt.
3-15/16	**432181**	6.4	**432190**	6.1	**132836**	1.0	**432153**	2	**133988**	.3	**132192**	1.6
4-7/16	**432184**	7.0	**432193**	6.8	**132836**	1.0	**430198**	2	**133989**	.4	**132192**	1.6
4-15/16	**432187**	7.5	**432196**	7.3	**132836**	1.0	**430198**	2	**133990**	.5	**132193**	2.4
5-7/16	**133932**	12.4	**132546**	11.6	**132837**	2.0	**430155**	2	**133991**	.6	**132193**	2.4
6	**133933**	14.8	**132547**	10.6	**132838**	2.5	**430155**	2	**133992**	.8	**132198**	3.6
7	**133937**	19.0	**132548**	13.5	**132838**	2.5	**430155**	2	**133993**	1.2	**132198**	3.6
8	**133938**	24.9	**132549**	15.5	**132839**	3.0	**430155**	2	**133994**	1.3	**132198**	3.6

Shaft Size	A		B	C	D (Min.-Max.)	E	F Dia. Bolt	G	H		J	
	STL	SSL							STL	SSL	STL	SSL
3-15/16	15	11	19	7	14-1/4—15-3/4	3-1/2	7/8	1-3/4	3	2	12-1/16	12-5/8
4-7/16	16-1/2	12-1/2	20-1/2	7-1/2	15-1/4—16-3/4	4	1	2	3-1/2	3-1/2	14-5/8	14-5/8
4-15/16	18-1/4	13-3/4	22-1/2	8-1/2	16-5/8—18-7/8	4-1/2	1	**	3-1/8	2-1/2	15-7/8	15-7/8
5-7/16	19-3/4	15-1/4	24-1/2	9-1/2	18-1/4—20-1/4	5	1-1/8	2-1/4	3-3/4	2-3/4	17-1/8	17-1/8
6	21-1/4	16-1/4	26	10-1/2	19-5/8—21-7/8	5-1/2	1-1/4	2-1/2	4	3	17-5/8	18-1/2
7	24-1/2	18-3/4	29-3/4	12-1/2	22-5/8—25-3/8	6-1/2	1-1/2	3	5-1/8	3-1/2	19-7/16	21
8	27-3/4	21	34	14-1/2	25-5/8—28-7/8	7-1/2	1-3/4	3-1/2	5-7/8	4	21-5/16	23-1/2

Shaft Size	K	L	M	N	N1	P	Q	R Pipe		T		U	U1	U2
				STL	SSL			PLXC	WC Rep't	STL	SSL		STL	SSL
3-15/16	11-15/16	8	5-3/4	5-15/16	2-5/8	10-1/8	1-1/4	1	1/2	2-1/8	2-1/8	2-11/16	3/4	3/4
4-7/16	13-7/8	9	6-1/4	6-3/8	3-3/8	11-1/2	1-3/8	1	1/2	3	2	2-13/16	3/4	1
4-15/16	15-1/16	10	7	7-1/16	3-3/4	12-1/2	1-5/16	1-1/4	1/2	2-7/8	2	3-5/16	1	1-1/4
5-7/16	15-15/16	11	7-1/2	7-5/8	4-3/8	13-3/4	1-9/16	1-1/4	1/2	3-3/8	2-1/2	3	1	1-1/4
6	18	12	8-1/4	8-1/4	4-1/2	14-3/4	1-3/4	1-1/4	3/4	3-7/8	2-3/4	3-1/8	1	1-1/4
7	20-1/4	14	9-1/2	9-9/16	5	17	2	1-1/4	3/4	5	3	3-3/4	1-1/4	1-1/4
8	22-1/2	16	10-3/4	11	5-3/4	19	2	1-1/4	3/4	5-1/4	4	4-9/16	1-1/4	1-1/4

Shaft Size	V	W	X	Y		Y1		Z	A1	B1	Thrust Collars Dia. x Width ●	Oil (Fl. oz.)
				PLXC	WC Rep't	PLXC	WC Rep't					
3-15/16	3	5	8-9/16	1-1/4	1	1-1/4	1	2-1/8	3/4	7-1/16	6 x 1-13/16	50
4-7/16	3-1/2	5-5/8	9-3/16	1-1/4	1	1-1/4	1	3	3/4	7-5/8	6-1/2 x 1-13/16	64
4-15/16	3-1/2	6-1/8	10	1-1/2	1	1-3/4	1	2-7/8	3/4	8	7-1/4 x 2 1/16	90
5-7/16	3-1/2	6-3/4	10-3/8	1-1/2	1	1-3/4	1	3-3/8	3/4	8-3/4	7-3/4 x 2 1/16	100
6	4	7-1/4	11-3/16	1-3/4	1-1/4	2	1-1/4	3-7/8	1	9-7/8	8-1/2 x 2 3/16	132
7	4-1/2	8-3/8	12-15/16	1-3/4	1-1/4	2	1-1/4	5	1	10-7/8	10 x 2-11/16	240
8	5	9-5/8	14-13/16	1-3/4	1-1/4	2	1-1/4	5-1/4	1-1/4	12	11-1/2 x 3 3/16	320

\# Not adaptable to non-expansion conversion.

One required per pillow block end.

\> One required per pillow block.

>> Not furnished unless specifically ordered.

* Vibration detector adaptor kit @ 5.0 lbs. (part no. 430153), thermostat @ 2.0 lbs. (part no. 133116) to be used with heater.

** 2 1/4″ on STL; 2″ on SSL

+ + Non–Expansion Pillow Blocks include housing, liner and two split thrust collars

● Two required for each expansion block when a non-expansion block is required. Not adaptable to short Series (SSL).

⊗ To differentiate between XC and water cooled replacement liners see "R" dimension pipe size.

⊗⊗ Two required per 3 15/16 thru 4 15/16 sizes; three for 5 7/16 and larger.

All sizes are pre-machined for accessories: circulating oil, vibration detector, heater and thermostat.

MODIFICATIONS/ACCESSORIES PAGE B12–34

SLEEVOIL—R Series

9″, 10″ & 12″ XC SLEEVOIL PILLOW BLOCKS

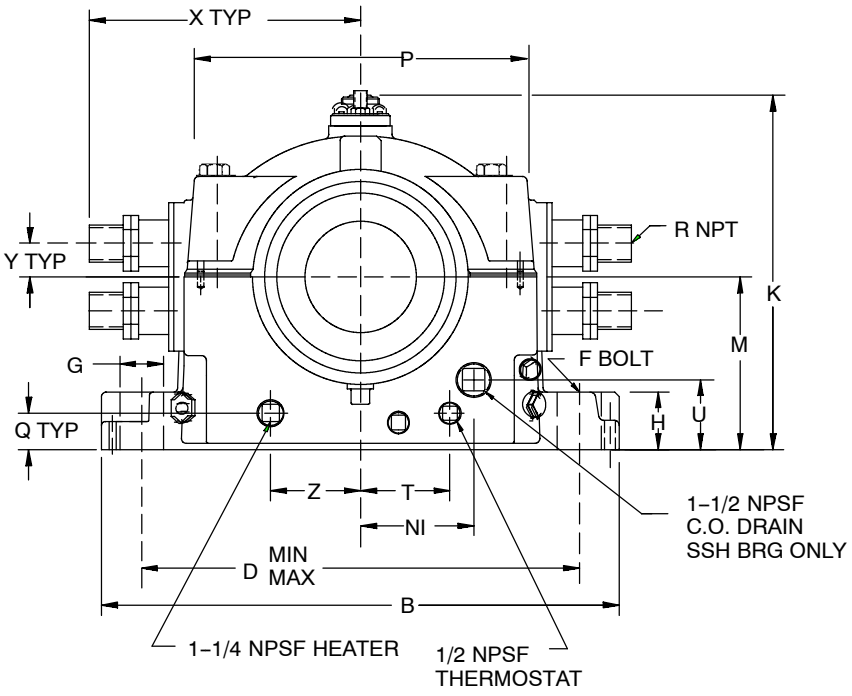

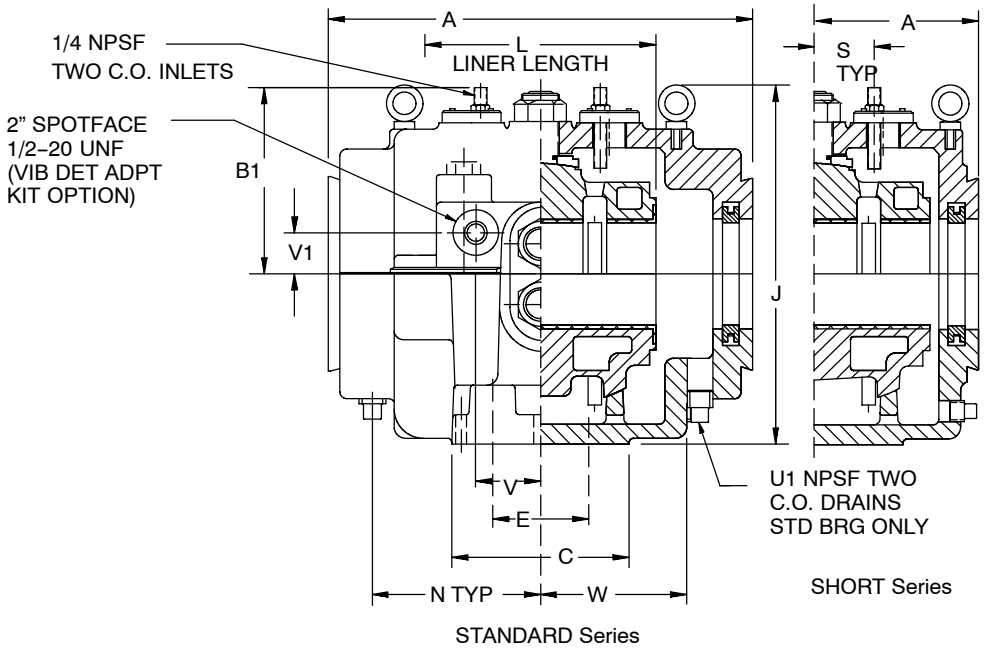

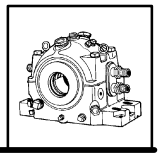

SLEEVOIL—R Series

9″, 10″ & 12″ XC SLEEVOIL PILLOW BLOCKS

Shaft Size	Non–Expansion Pillow Blocks XC (Externally Cooled) + +		Expansion Pillow Blocks XC (Externally Cooled)				Required to Make Up Non-Expansion Pillow Blocks ● >>	
	STL-XC		STL-XC		SSL-XC #		XC Split Thrust Collars	
	Part Number	Wt.	Part Number	Wt.	Part Number	Wt.	Part Number	Wt.
9	**134233**⊗	1714	**132538**⊗	1600	**133565**⊗	1500	**133303**	57
10	**134234**⊗	2148	**132539**⊗	2000	**133566**⊗	1750	**133304**	74
12	**134235x**	....	**132559x**	3300	**....**	....	**133305**	....

Shaft Size	Optional Accessories >> *										Replacement Liner Assemblies	
	Auxiliary Seal Kits ##		Housing End Cap Kits		Heater XC		Circulating Oil Inlet Kits >		Neoprene End Closure ##		XC	
	Part Number	Wt.	Part Number	Wt.	Part Number	Wt.	Part Number	Wt.	Part Number	Wt.	Part Number	Wt.
9	**132814**	23.1	**132564**	15.9	**132840**	4.0	**430155**	2	**133996**	1.5	**132591**	300
10	**132816**	24.2	**132565**	16.4	**132840**	4.0	**430155**	2	**133995**	1.6	**132594**	400
12	**132819**	40	**132566**	25	**....**	....	**....**	....	**133997**	1.9	**132597**	600

Shaft Size	A		B		C		D (Min.-Max.)		E	
	STL	SSL	STL	SSL	STL	SSL	STL	SSL	STL	SSL
9	29	22-1/4	37	37	15-1/2	15-1/2	28-3/8—31-5/8	28-3/8—31-5/8	8	8
10	30	23-1/4	40	40	17	17	31-1/4—34-3/4	31-1/4—34-3/4	9	9
12	34	...	46	...	18	...	36-5/8—40-3/8	....	10	...

Shaft Size	F-Bolt		G		H		J		K		L	M
	STL	SSL	STL	SSL	STL	SSL	STL	SSL	STL	SSL	XC	STL & SSL
9	1-3/4	1-3/4	3-1/2	3-1/2	6	6	26-13/16	26-3/4	25-1/2	25-1/2	17	12
10	2	2	4	4	6-3/4	6-3/4	29-5/16	29-1/4	28-1/4	28-1/4	18	13-1/2
12	2	....	4-1/8	....	7	....	34-3/4	29-5/16	33-1/16	...	20	16

Shaft Size	N	N1	P		Q	R Pipe	S	T	U	U1	V	V1
	STL	SSL	STL	SSL	STL & SSL	XC	STL & SSL	STL & SSL	SSL	STL	STL & SSL	STL & SSL
9	11-7/8	5-3/4	21-3/4	21-3/4	2-1/2	1-1/4	3-3/8	6-3/8	5-1/8	1-1/2	5	1-1/2
10	12-3/8	5-1/2	23-3/4	23-3/4	3	1-1/2	3-1/2	7	6-1/8	1-1/2	7	2
12	....	....	28-3/4	....	...	2	...	...	...	...	...	...

Shaft Size	W		X	Y	Z	B1		Thrust Collar (Dia. x Width) ●	Oil (fl. oz.)
	STL	SSL	XC	XC	STL & SSL	STL	SSL	XC	
9	10-5/8	10-5/8	16-1/4	2-1/4	6-3/8	13-5/8	13-5/8	13 x 3-3/16	320
10	11	11	17-1/2	2-5/8	7	14-1/2	14-1/2	14-3/8 x 3-3/16	320
12	12-1/16	....	20-1/4	....	....	....	....	17-1/4 x 3-1/2	640

\# Not adaptable to non-expansion conversion.
One required per pillow block end.
> One required per pillow block.
>> Not Furnished unless specifically ordered.
* Vibration detector adaptor kit @ 5.0 lbs. (part no. 430153) thermostat @ 2.0 lbs. (part no. 133116) to be used with heater.
● Two required for each expansion block when a non-expansion block is required. Not adaptable to short Series (SSL).
⊗ All housings are pre-machined for accessories: circulating oil vibration detector, heater and thermostat.
x Assembled-to-order, Not "L" version.
+ + Non–Expansion Pillow Blocks include housing, liner and two split thrust collars

MODIFICATIONS/ACCESSORIES PAGE B12–34