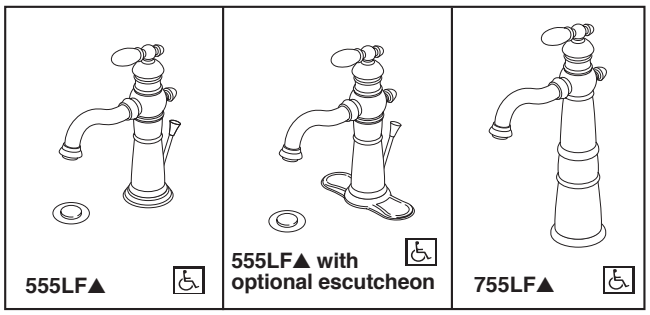

Submitted Model No.:_____

Specific Features:_____

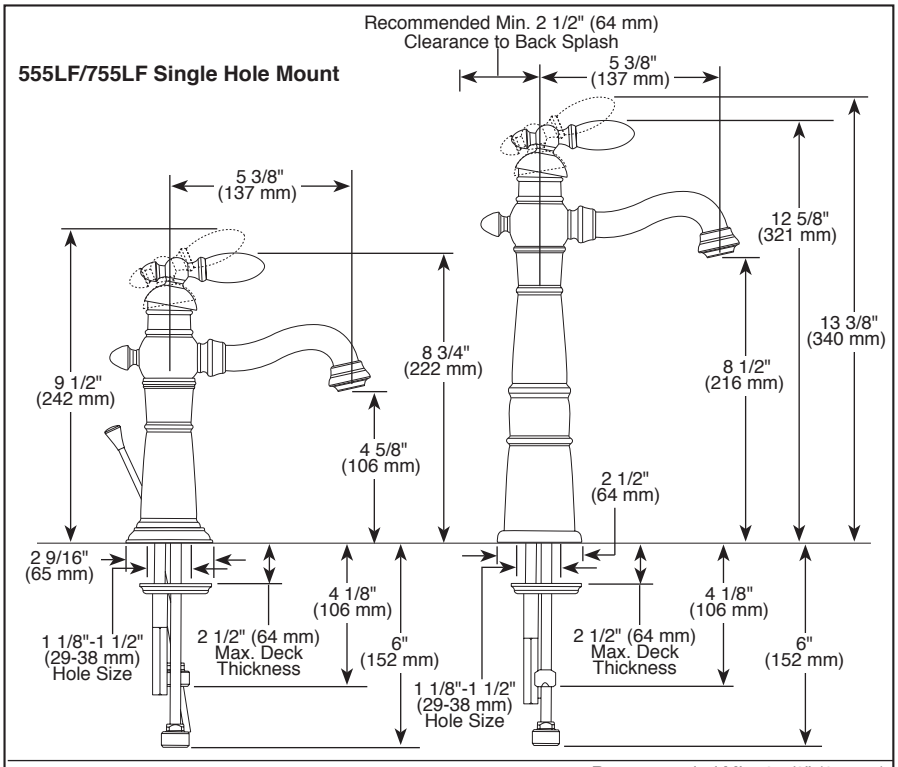

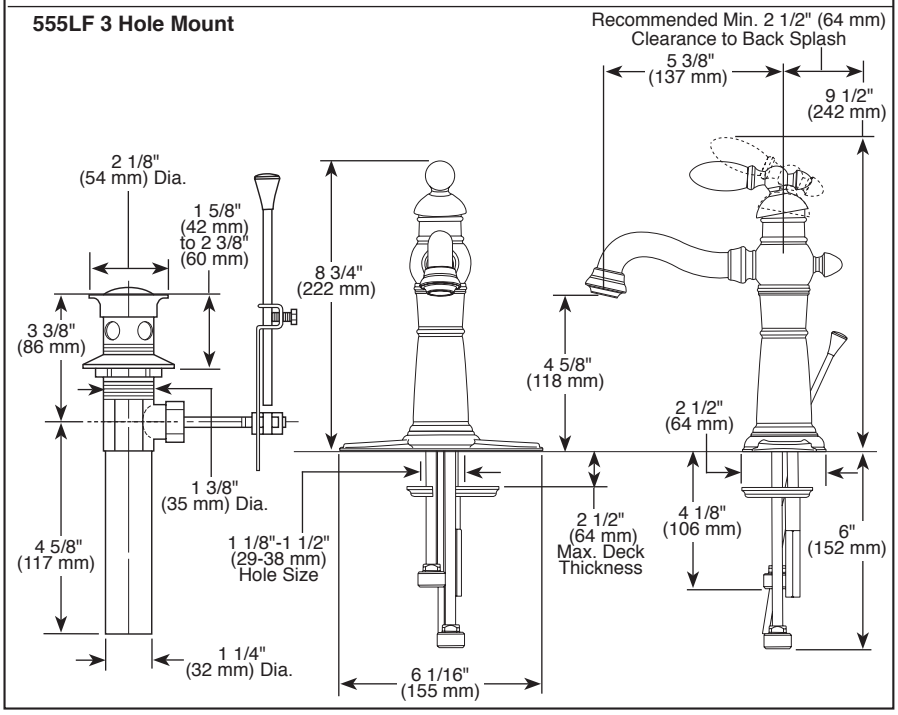

▲ Designate Proper Finish Suffix

Delta reserves the right (1) to make changes in specifications and materials, and (2) to change or discontinue models, both without notice or obligation. Dimensions are for reference only. See current full-line price book or www.deltafaucet.com for finish options and product availability.

DSP-L-555LF Rev. E

LAVATORY FAUCETS

- Victorian® Bath Collection
- Single Handle Deck Mount
- Single Hole Riser Model

STANDARD SPECIFICATIONS:

- Max. 1.2 gpm @ 60 psi, 4.5 L/min @ 414 kPa
- One or three hole mount
- Solid brass fabricated body
- Control mechanism is replaceable cartridge with ceramic plates
- Keyed trim ring and 6 1/16" (155 mm) escutcheon to help alignment and aid installation
- 1/2" NPSM threaded male inlet shanks
- Models have metal drain with pop-up type fitting with plated flange and stopper

WARRANTY

- Lifetime limited warranty on parts (other than electronic parts and batteries) and finishes: or, for commercial users, for 5 years from date of purchase.
- 5 year limited warranty on electronic parts (other than batteries); or, for commercial users, for 1 year from the date of purchase. No warranty is provided on batteries.

COMPLIES WITH:

- ASME A112.18.1 / CSA B125.1
- ASME A112.18.2 / CSA B125.2
- Indicates compliance to ICC/ANSI A117.1/ADA
- EPA WaterSense®
- Verified compliant with .25% weighted average Pb content regulations.

DELTA FAUCET COMPANY
55 E 111th Street, Indianapolis, Indiana 46280
350 South Edgeware Road, St. Thomas, ON N5P 4L1
© 2017 Masco Corporation of Indiana