Motor/Pump Assembly

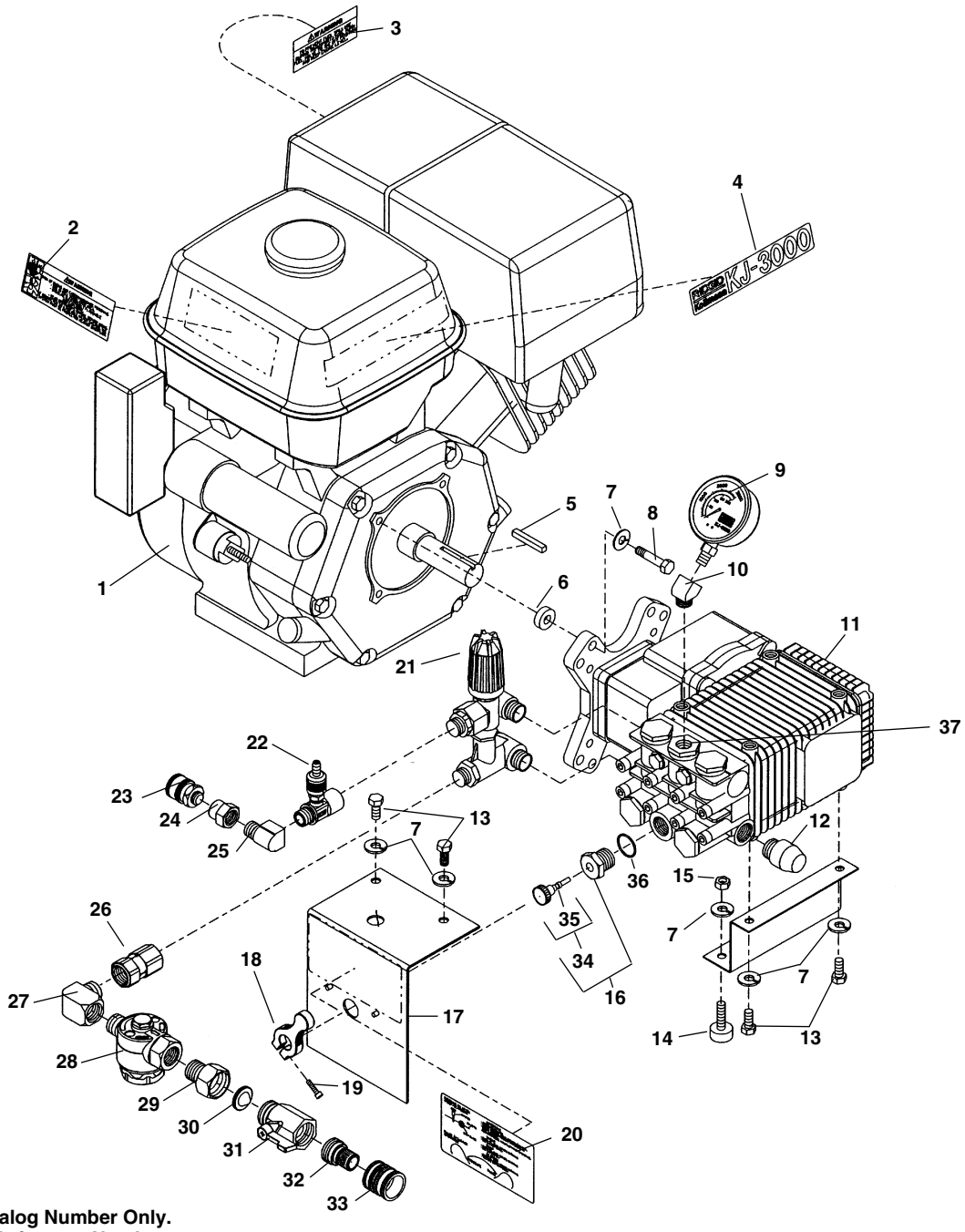

NOTE: Order parts by Catalog Number Only.
DO NOT order by Reference Number.

Ref. No.	Catalog No.	Description
1	66092	Gasoline Engine, 13 Hp Manual Start
	66097	Gasoline Engine, 13 Hp Electric Start
2	49562	Decal, Warning
3	60102	Decal, Fuel Warning
4	66102	Decal, Model No.. KJ-3000
5	66107	Key, 1/4″ x 1/4″ x 1″
6	66112	Spacer, Gearbox Mount
7	60080	Lock Washer (8)
8	75350	Hex Screw, 3/8″ - 16 x 1 1/4″ (4)
9	66117	Pressure Gauge, KJ-3000
10	48107	Street EL, 45 Degree
11	66122	Pump Complete, 3000 PSI
12	65412	Thermal Relief Valve
13	66132	Hex Hd. Cap Scr., Metric M8-10 (4)
14	48187	Rubber Foot (4)
15	60230	Nut (4)
16	85867	Pulse Actuator Assembly
17	66137	Panel
18	63907	Pulse Actuator Handle
19	46375	Soc. Hd. Cap Screw, #6 - 32 x 5/8″
20	66142	Decal, Instruction
21	65202	Unloader Valve
22	66147	Chemical Injector
23	48117	Quick Connect – Female
24	66157	Reducer Adapter
25	66162	Street EL, 90 Degree
26	66867	Coupling, 1/2″ NPT
27	48147	Street EL, 90 Degree, 1/2″ NPT
28	66167	Inlet Filter
29	49587	Hose Adapter w/Washer
30	48287	Filter Washer
31	49582	Water Shut-Off
32	48202	Hose Coupler Nipple
33	48197	Hose Coupler
34	85877	Adjusting Screw w/Seals
35	85882	Seals for Adjusting Screw
36	65392	O-Ring
	65127	Wash Wand Nozzle (Not Shown)
37	95787	

Pump Assembly

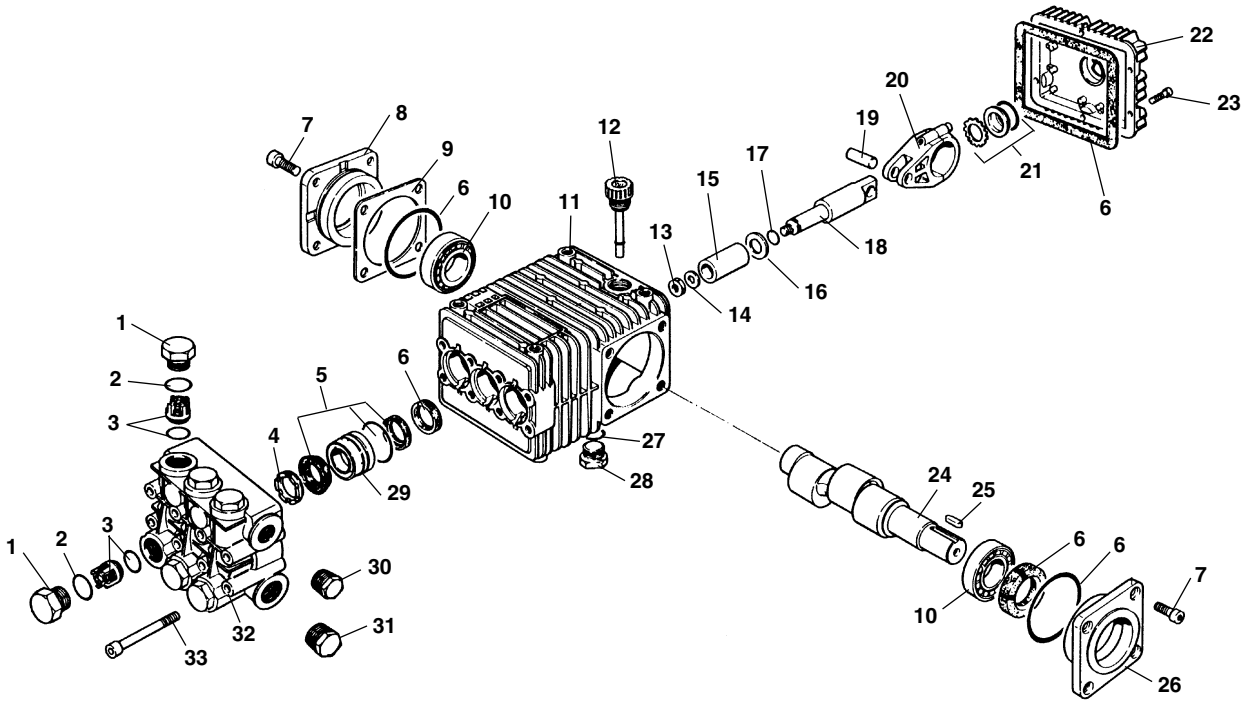

NOTE: Order parts by Catalog Number Only.
DO NOT order by Reference Number.

Ref. No.	Catalog No.	Description
—	66122	Pump Assembly
1	66192	Valve Cap (6)
2	65392	O-Ring (6)
3	66197	Valve Kit (6 Valves, 6 O-Rings)
4	66202	Cup Spreader (3)
5	66207	Plunger Seal Kit (3 Sets)
6	66212	Crankcase Seal Kit (7 pcs)
7	66217	Soc. Head Cap Screw (8)
8	66222	End Cover
9	66227	Shim Set
10	66232	Ball Bearing (2)
11	66237	Crankcase
12	65262	Dipstick
13	66242	Nut (3)
14	66247	Plunger Seal Washer (3)
15	66252	Plunger (3)
16	66257	Slinger (3)
17	66262	O-Ring (3)
18	66267	Lower Plunger (3)
19	66272	Wrist Pin (3)
20	66277	Connecting Rod (3)
21	65317	Sight Glass/O-Ring/Retainer
22	66282	Crankcase Cover
23	66287	Soc. Head Cap Screw (6)
24	66292	Crankshaft
25	66297	Key
26	66302	End Cover, Shaft
27	65357	O-Ring
28	65362	Drain Plug
29	66307	Cup Retainer (3)
30	65402	Port Plug, Small
31	65407	Port Plug, Large
32	66312	Pump Head
33	66317	Soc. Head Cap Screw (8)

Cart with Hose Reel

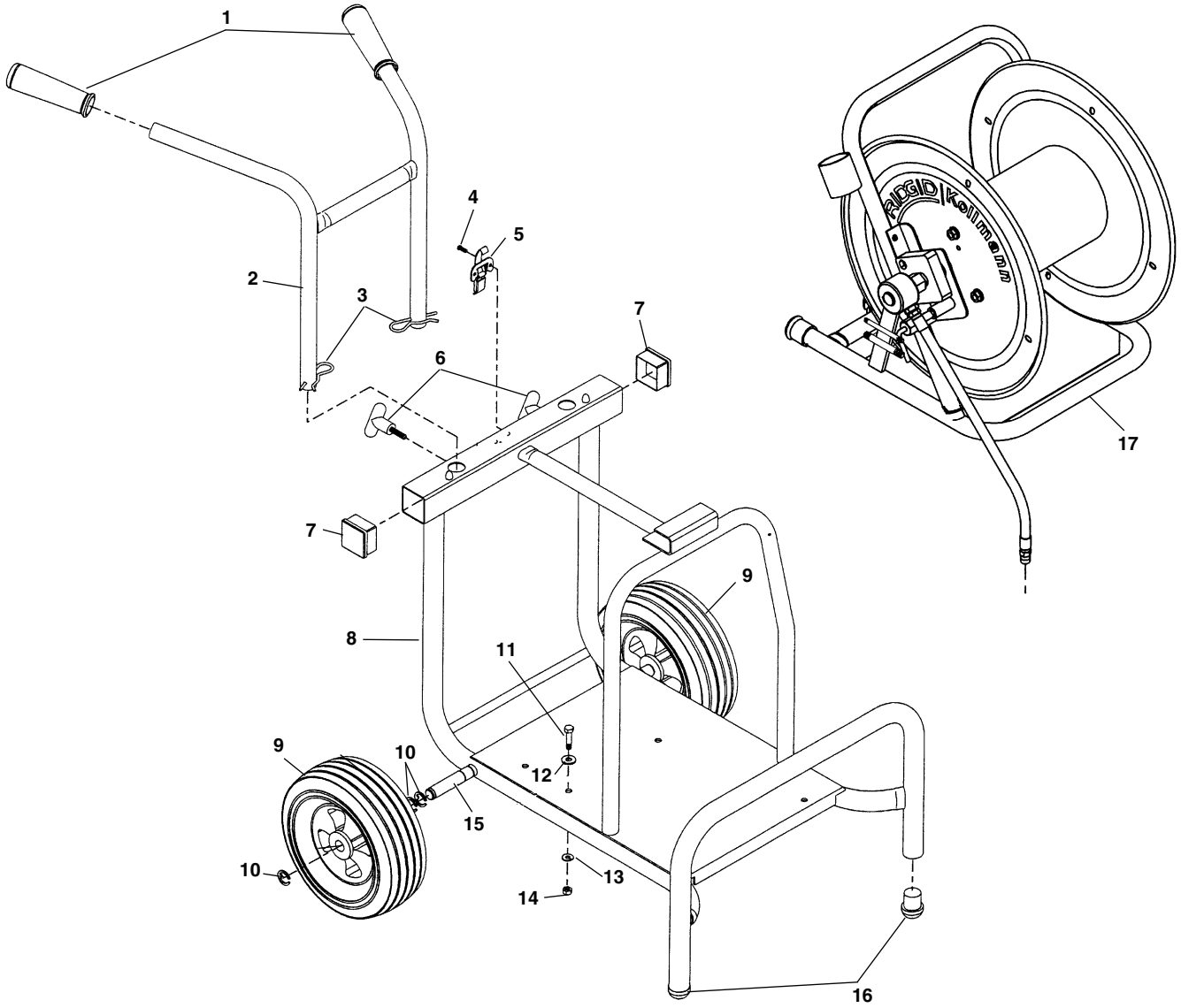

NOTE: Order parts by Catalog Number Only.
DO NOT order by Reference Number.

Ref. No.	Catalog No.	Description
1	60827	Hand Grip (2)
2	66017	Handle Assembly
3	60677	Hairpin (2)
4	27017	Screw, Self Tapping #12-24 x 3/4″ (2)
5	47972	Latch
6	60622	Mounting Knob (2)
7	66027	Square Plug (2)
8	66032	Frame
9	23597	Wheel (2)
10	60050	Retaining Ring (6)
11	43992	Hex Screw 3/8″-16 x 2″ (4)
12	59970	Flat Washer 3/8″ (4)
13	60085	Lock Washer 3/8″ (4)
14	60395	Hex Nut 3/8″ (4)
15	66037	Axle
16	61470	Rubber Plug (2)
17	64862	H-38 Hose Reel Assembly

H-38 Reel Assembly

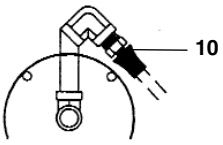

Inside View

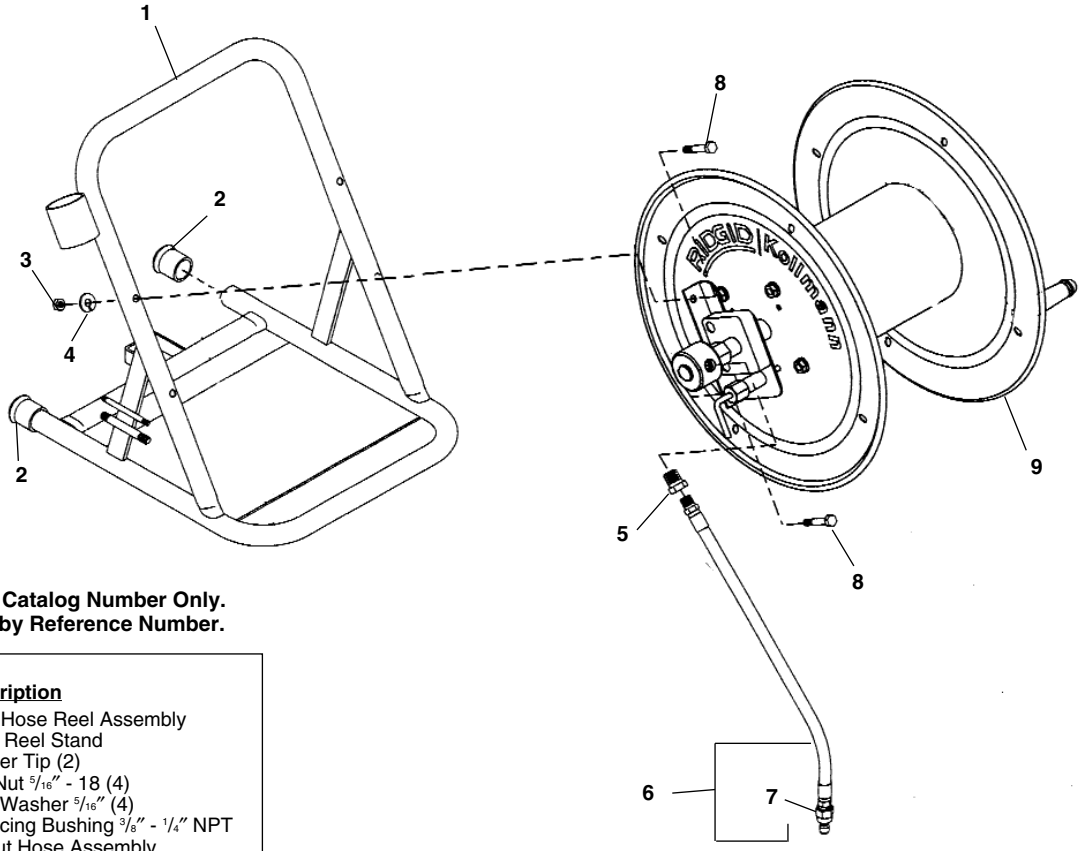

NOTE: Order parts by Catalog Number Only.
DO NOT order by Reference Number.

Ref. No.	Catalog No.	Description
—	64862	H-38 Hose Reel Assembly
1	66022	Hose Reel Stand
2	37962	Rubber Tip (2)
3	60230	Hex Nut 5/16″ - 18 (4)
4	60080	Lock Washer 5/16″ (4)
5	48152	Reducing Bushing 3/8″ - 1/4″ NPT
6	66047	Output Hose Assembly
7	48002	Quick Connect - Male
8	43847	Hex Screw 5/16″ - 18 x 1 1/2″ (4)
9	48022	Hose Reel
10	35275	Spring

Reel Components

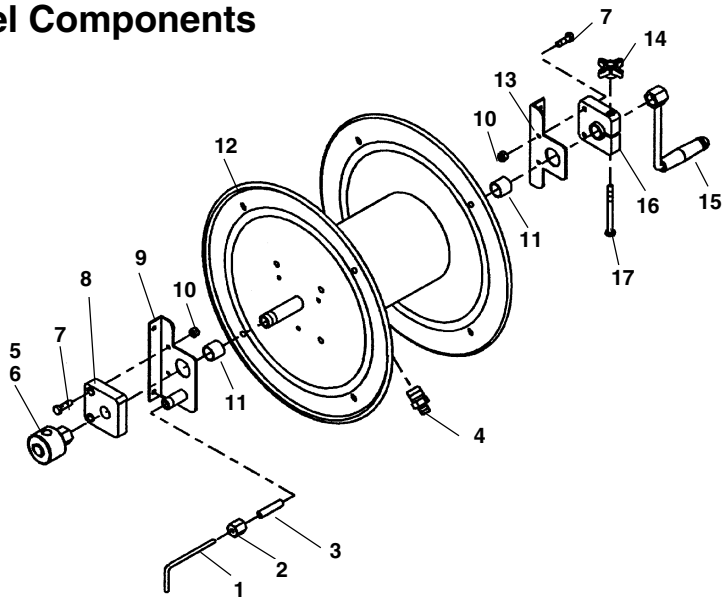

Ref. No.	Catalog No.	Description
—	48022	Hose Reel COMPLETE
1	67677	Reel Lock
2	67682	Lock Nut
3	67687	Sleeve
4	67692	Reducer Bushing, 1/2″ – 1/4″ NPT M
5	67697	Swivel Connector
6	67702	Service Kit, Swivel
7	85910	Hex Screw, 5/16″ – 18 x 1″ (2)
8	67707	Bearing Block, Plain
9	67712	Bracket, Lock Side
10	75110	Hex Nut, 5/16″ – 18 (2)
11	67717	Spacer (2)
12	67722	Spool
13	67727	Bracket, Plain
14	67732	Knob, Drag Brake
15	67737	Crank
16	67742	Bearing Block, Drag
17	67747	Hex Screw, 5/16″ – 18 x 3 1/2″

Electric Start Components

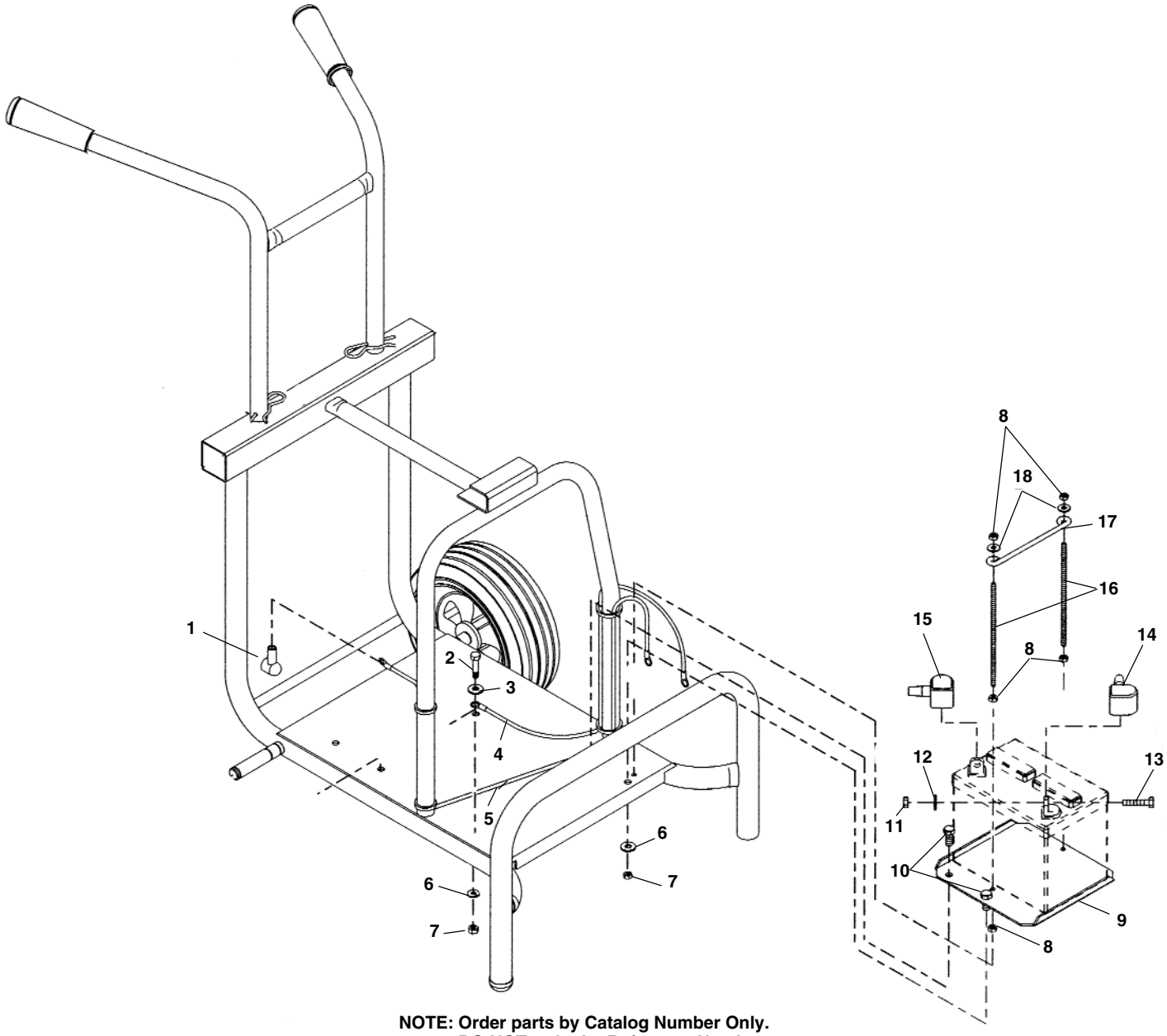

NOTE: Order parts by Catalog Number Only.
DO NOT order by Reference Number.

Ref. No.	Catalog No.	Description
1	66042	Insulator Cap
2	43992	Hex Screw 3/8″ 16 x 2″ (2)
3	59970	Flat Washer 3/8″ (2)
4	66082	Battery Cable, Negative
5	66087	Battery Cable, Positive
6	60085	Lock Washer 3/8″ (2)
7	60395	Hex Nut 3/8″ - 16 (2)
8	80370	Hex Nut 1/4″ - 20 (6)
9	66072	Battery Tray
10	45470	Hex Screw 3/8″ - 16 x 1″ (2)
11	60230	Hex Nut 5/16″ - 18 (2)
12	60080	Lock Washer 5/16″ (2)
13	88045	Hex Screw 5/16″ - 18 x 7/8″ (2)
14	66067	Terminal Insulator - Black
15	66077	Terminal Insulator - Red
16	66062	Tie Down Rod 1/4″ - 20 (2)
17	66057	Battery Strap
18	84720	Flat Washer 1/4″ (2)

Gearbox

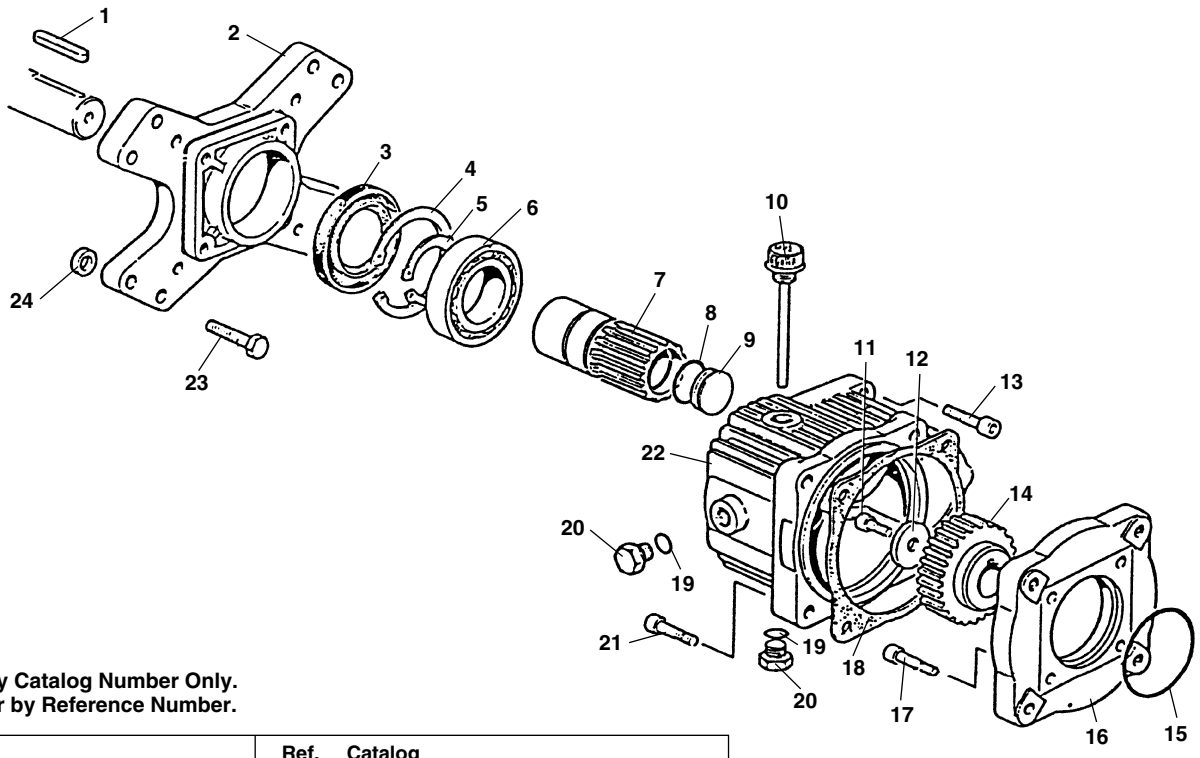

NOTE: Order parts by Catalog Number Only.
DO NOT order by Reference Number.

Ref. No.	Catalog No.	Description
1	66107	Key, 1/4″ x 1/4″ x 1″
2	66322	Mounting Flange
3	66327	Shaft Seal
4	66332	Retaining Ring
5	66337	Retaining Ring
6	66342	Ball Bearing
7	66347	Gear Shaft
8	66352	O-Ring
9	66357	Plug
10	66782	Dipstick
11	66362	Soc. Hd. Cap Scr. M6 x 18
12	66367	Washer
13	66372	Soc. Hd. Cap Scr. M8 x 25 (4)
14	66377	Gear
15	66382	O-Ring
16	66387	Flange
17	66392	Soc. Hd. Cap Scr. M8 x 30 (4)
18	66397	Gasket
19	65357	O-Ring (2)
20	65362	Drain Plug (2)
21	66402	Soc. Hd. Cap Scr. M10 x 25 (4)
22	66407	Housing
23	75350	Hex Screw, 3/8″ - 16 x 1 1/4″ (4)
24	66112	Spacer, Gearbox Mount (4)

FV-1 Foot Valve

Ref. No.	Catalog No.	Description
—	48157	Foot Valve Complete, FV-1
1	49787	Elbow w/Swivel, 1/4″ NPT (2)
2	49777	Decal, Model No.
3	49772	Cover
4	36787	Screw, Self Tapping, #10 (4)
5	49792	Lock Washer 9/16″ (2)
6	49797	Street EL, 1/4″ NPT(2)
7	49782	Valve Assembly
8	49802	Carriage Bolt, 1/4″ NPT
9	47297	Lock Nut, 1/4″ - 20
10	49767	Foot Pedal
11	36737	Base
12	36747	Pivot Pin
13	48117	Quick Connect – Female

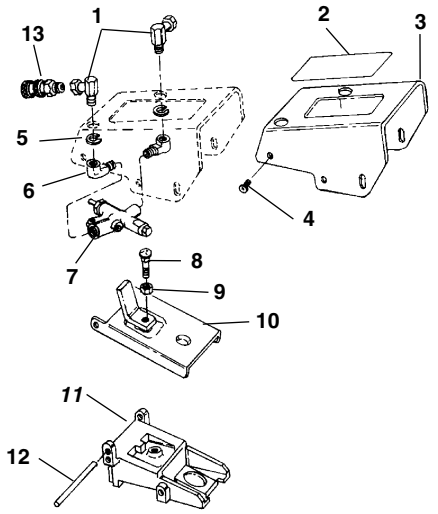

Unloader Valve - Early Style (Red Knob)

NOTE: Order parts by Catalog Number Only.
DO NOT order by Reference Number.

Ref. No.	Catalog No.	Description
1	64277	Control Knob
2	64282	Spring
3	64287	Stop Ring
4	64292	Set Screw
5	64297	Spring Guide
6	64302	Spring Button
7	64307	Poppet
8	64312	Pin
9	64317	Valve Body
10	64322	Gasket (2)
11	64327	Outlet Port Adapter
12	64332	Poppet Retainer
13	64337	Spring
14	64342	Poppet
15	64347	Plunger
16	64352	By-Pass Spring
17	64357	Gasket
18	64362	Inlet Adapter
19	64367	By-Pass Adapter
20	64372	Port Adapter
21	64377	Seal Kit

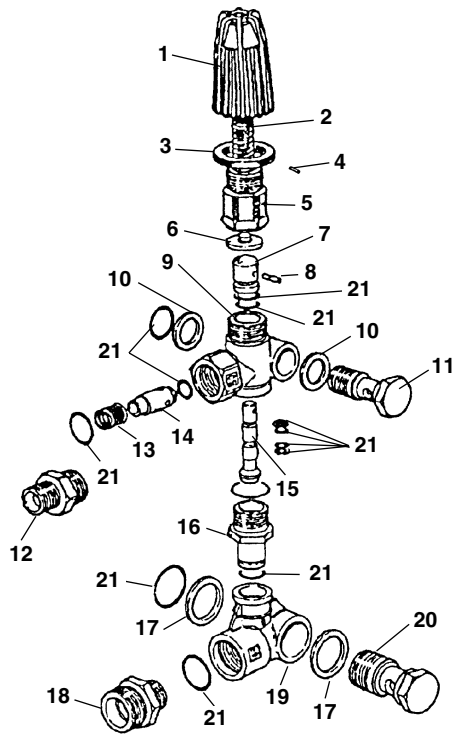

Unloader Valve - (Black Knob)

Ref. No.	Catalog No.	Description
—	65202	Unloader Valve Complete
1	85902	Plate
2	64302	Spring Button
3	64317	Body
4	85897	Spring
5	64307	Poppet
6	64312	Pin
7	64332	Outlet Poppet Retainer
8	64337	Spring
9	64342	Poppet
10	64352	By-Pass Seat
11	64347	Plunger
12	64362	Inlet Adapter
13	64367	Manifold
14	64372	Inlet Port Adapter
15	64327	Outlet Port Adapter
16	85892	Plug Cap
17	32270	Soc. Hd. Cap Screw $^{5}/_{16}$″ - 18 - $^{3}/_{4}$″
18	61115	Hex Nut $^{5}/_{16}$″ x 18
19	85887	Control Knob (Black)
20	85907	Cap
21	85917	Spring Guide
22	85912	Pin
23	64322	Seal Washer
24	64357	Seal Washer
25	85922	Seal Washer
26	85927	Seal Washer
27	85932	Seal Kit

