SYM	REVISION	BY	DATE
A	REVISED & REDRAWN	BSK	07/01/96

SCALE: ~

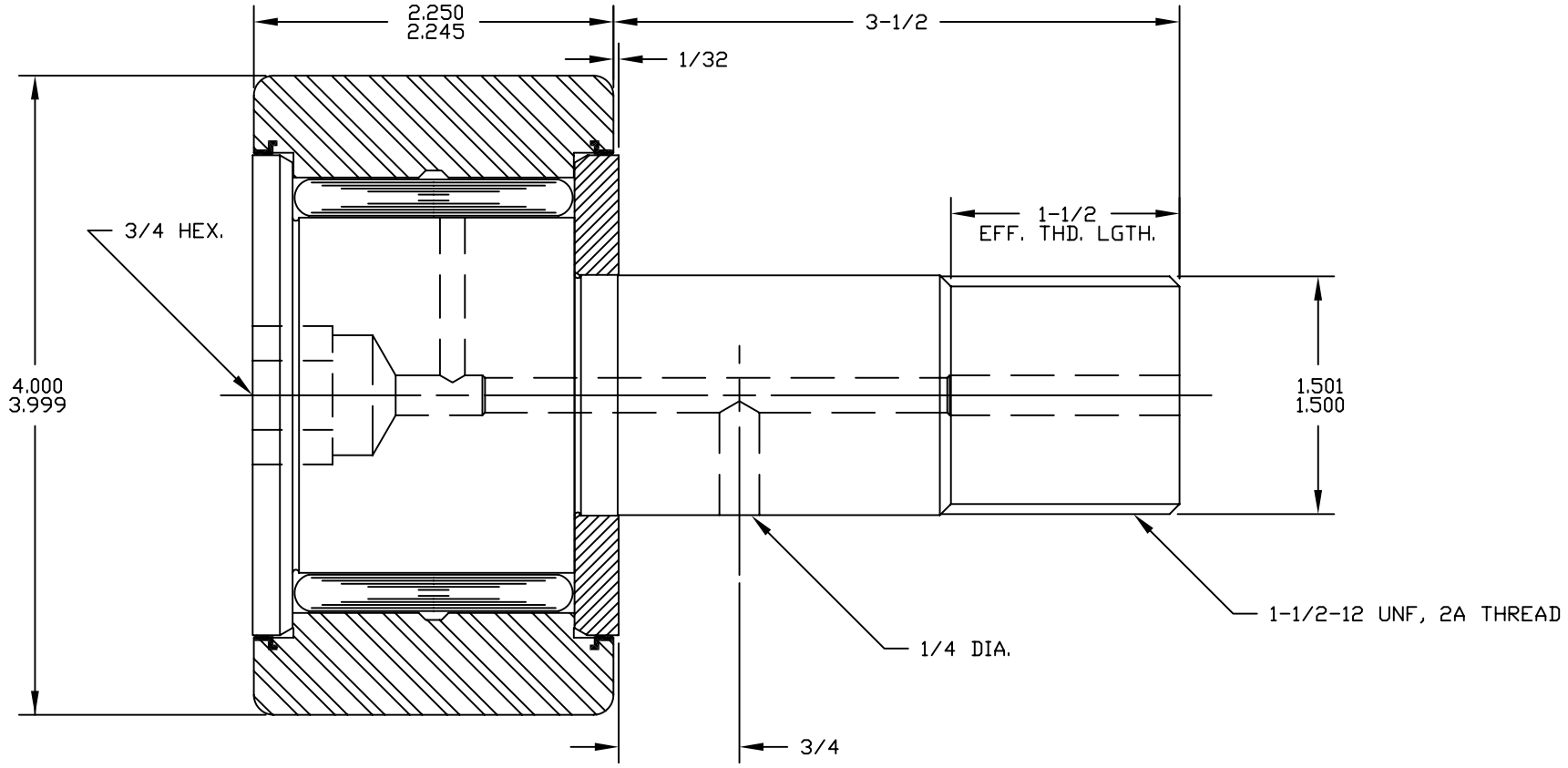

BASIC DYNAMIC RATING - 35,990 LBS.
MAX. STATIC CAPACITY - 39,400 LBS
(BASED ON STUD STRENGTH)

MAT'L: ST'D BEARING STEELS, SEALS-ACETAL.
BEARING PACKED WITH GENERAL PURPOSE EP GREASE.
RELUBE PROVISIONS WILL ACCEPT 1/4" DRIVE TYPE
FITTINGS, PLUGS SUPPLIED FOR UNUSED HOLES.

BLACK OXIDE COAT ALL COMPONENTS

TOLERANCES
UNLESS OTHERWISE NOTED
FRACTIONS: ±.010 ANGLES: ±.5
2 PLACE DECIMALS (.00): ±.005
3 PLACE DECIMALS (.000): ±.002

ABC Inc.

ACCURATE BUSHING CO. INC.
Manufacturers of SMITH® Bearing Product
443 NORTH AVENUE
Garwood, NJ 07027

PART NAME	STANDARD CAM FOLLOWER		
PART NO.	CR-4-XB		
DRAWN BY	BSK	DATE	07/01/96
CHECKED BY		FILENAME	CRASSYS/4-XB