SYM	REVISION	BY	DATE
A	REVISED & REDRAWN	BSK	05/20/96

SCALE: FULL

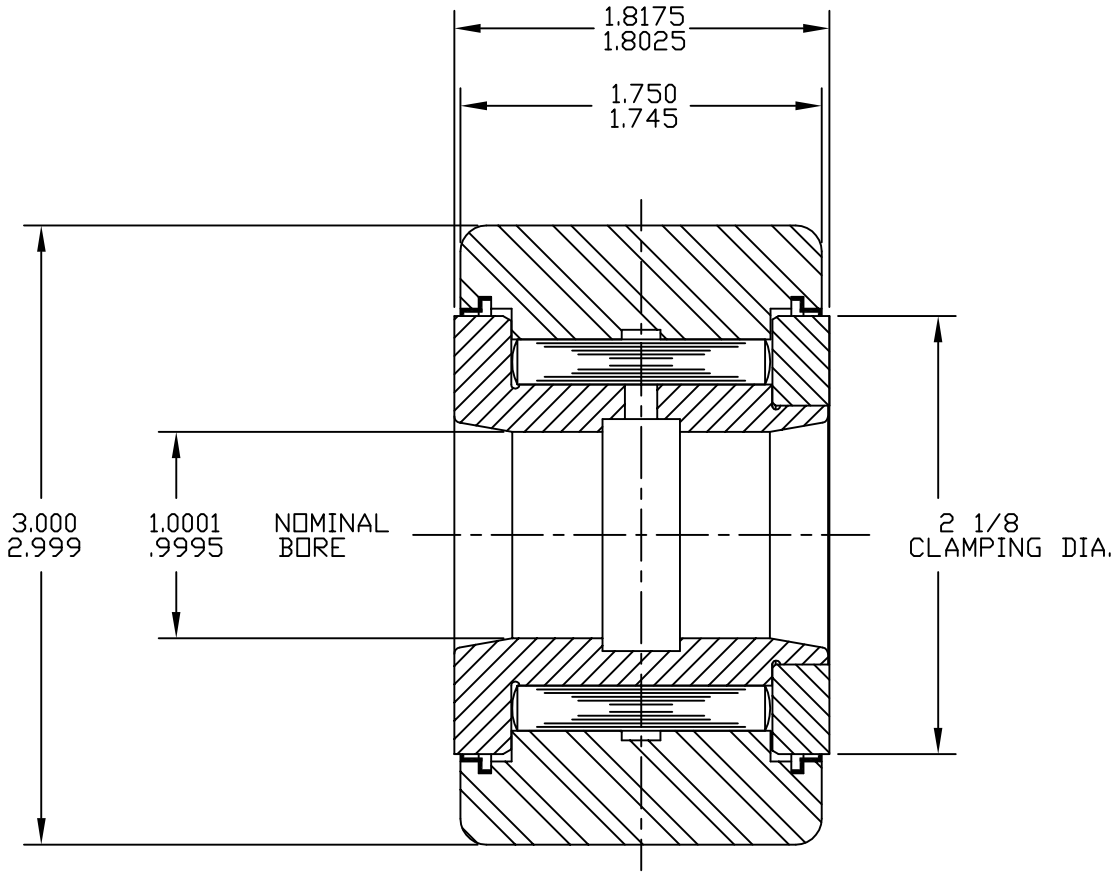

BASIC DYNAMIC LOAD RATING - 20,220 LBS
BASIC STATIC LOAD RATING - 33,220 LBS

MAT'L: ST'D BEARING STEELS, SEALS - ACETAL.
BEARING PACKED WITH GENERAL PURPOSE EP GREASE.

BLACK OXIDE COAT ALL COMPONENTS

TOLERANCES
UNLESS OTHERWISE NOTED
FRACTIONS: ±.010 ANGLES: ±.5
2 PLACE DECIMALS (.00): ±.005
3 PLACE DECIMALS (.000): ±.002

ABC Inc.

ACCURATE BUSHING CO. INC.
Manufacturers of SMITH® Bearing Product
443 NORTH AVENUE
Garwood, NJ 07027

PART NAME	STANDARD CAM FOLLOWER		
PART NO.	YR-3-X		
DRAWN BY	BSK	DATE	05/20/96
CHECKED BY		FILENAME	YRASSYS/3-X