| SYM | REVISION | BY | DATE |
|---|---|---|---|
| A | REVISED & REDRAWN | BSK | 05/20/96 |

SCALE: FULL

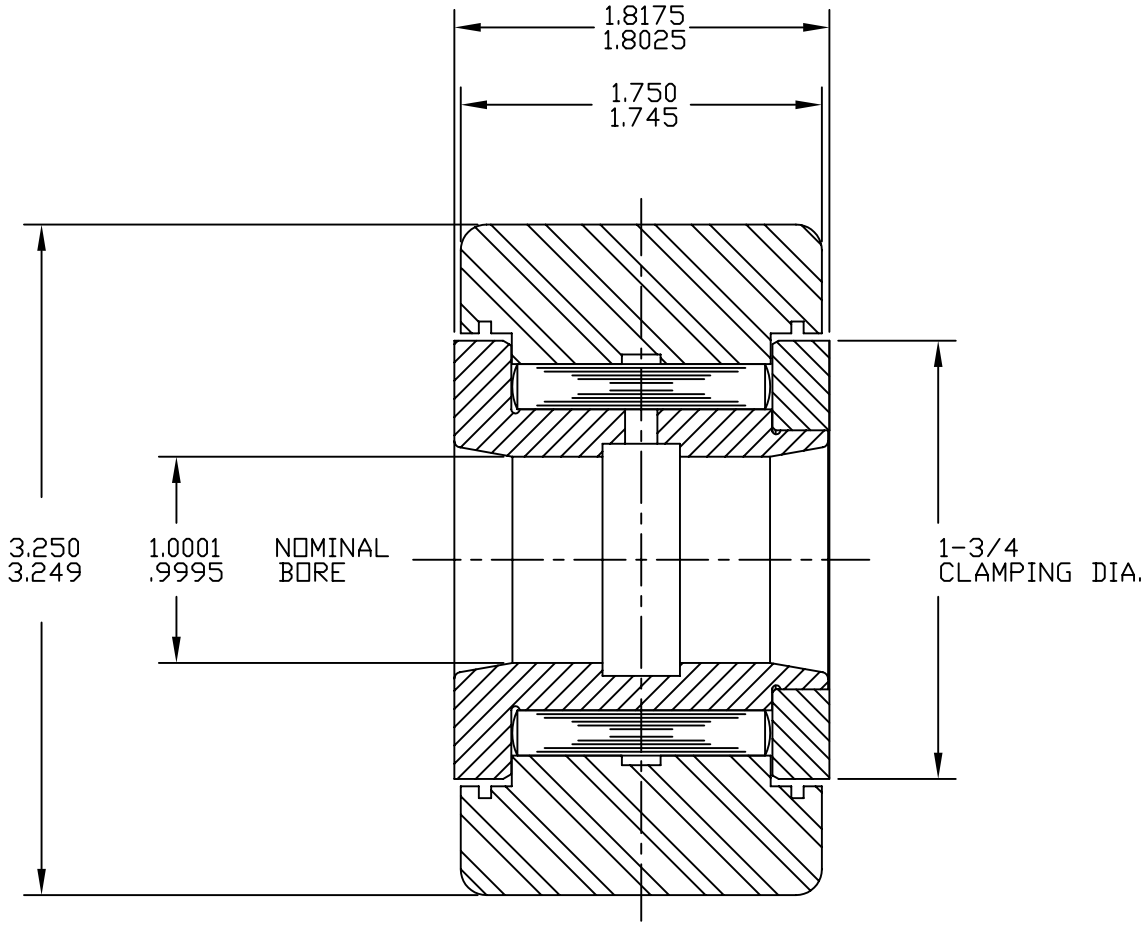


BASIC DYNAMIC CAPACITY - 14980

MAT'L: ST'D BEARING STEELS.
BEARING PACKED WITH GENERAL PURPOSE EP GREASE.
RELUBE PROVISIONS WILL ACCEPT 1/4" DRIVE TYPE
FITTINGS, PLUGS SUPPLIED FOR UNUSED HOLES.

TOLERANCES
UNLESS OTHERWISE NOTED
FRACTIONS: ±.010 ANGLES: ±.5
2 PLACE DECIMALS (.00): ±.005
3 PLACE DECIMALS (.000): ±.002

ABC Inc.

ACCURATE BUSHING CO. INC.
Manufacturers of SMITH® Bearing Product
443 NORTH AVENUE
Garwood, NJ 07027

| | | | |
|---|---|---|---|
| PART NAME | STANDARD CAM FOLLOWER | | |
| PART NO. | YR-3-1-4 | | |
| DRAWN BY | BSK | DATE | 05/20/96 |
| CHECKED BY | | FILENAME | YRASSYS/3-1-4 |