SYM	REVISION	BY	DATE
A	REVISED & REDRAWN	BSK	07/01/96

SCALE: ~

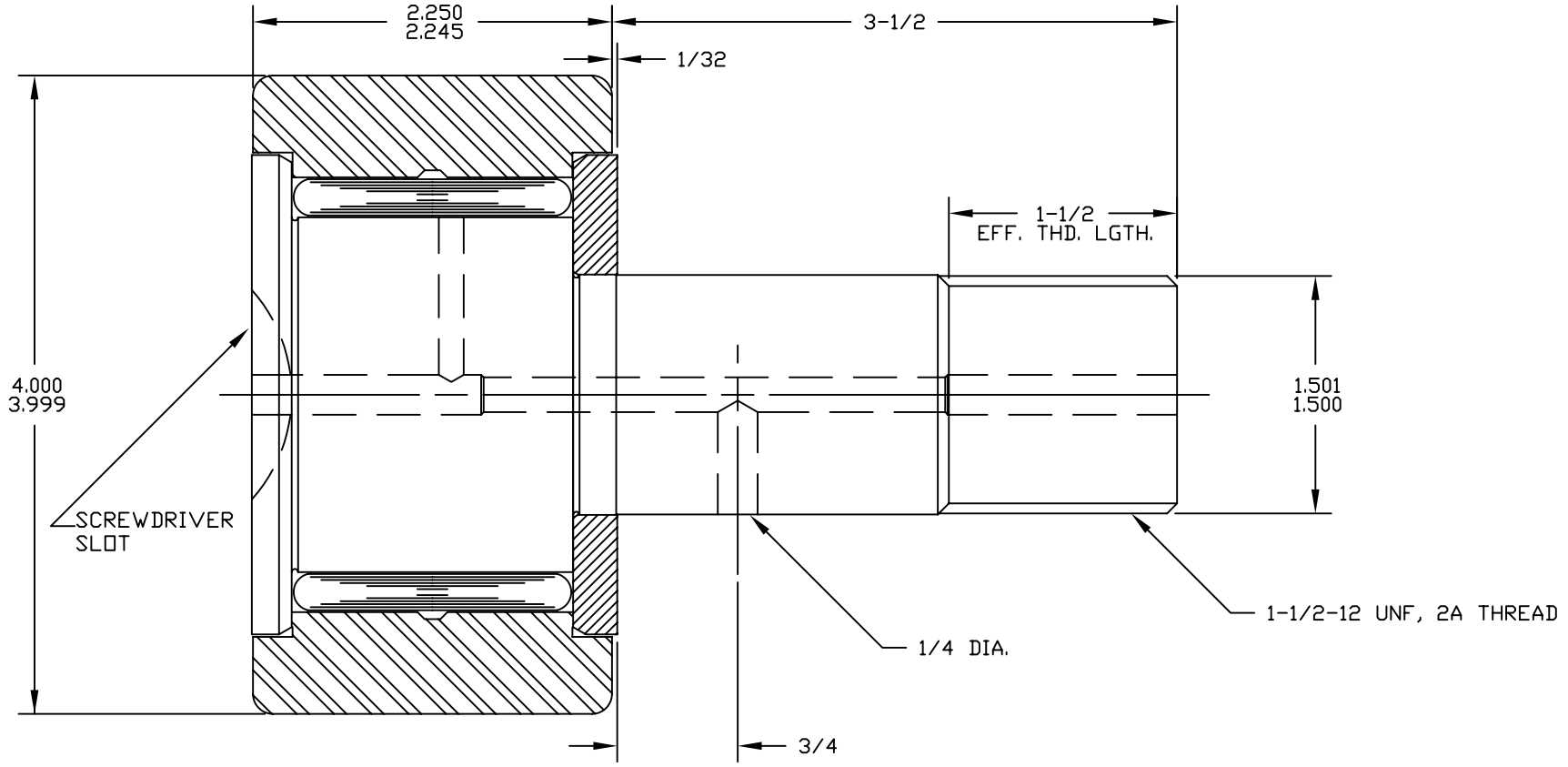

BASIC DYNAMIC CAPACITY - 35980
MAX. ALLOWABLE LOAD - 45100

MAT'L: ST'D BEARING STEELS.
BEARING PACKED WITH GENERAL PURPOSE EP GREASE.
RELUBE PROVISIONS WILL ACCEPT 1/4" DRIVE TYPE
FITTINGS, PLUGS SUPPLIED FOR UNUSED HOLES.

TOLERANCES
UNLESS OTHERWISE NOTED
FRACTIONS: ±.010 ANGLES: ±.5
2 PLACE DECIMALS (.00): ±.005
3 PLACE DECIMALS (.000): ±.002

ABC Inc.

ACCURATE BUSHING CO. INC.
Manufacturers of SMITH® Bearing Product
443 NORTH AVENUE
Garwood, NJ 07027

PART NAME	STANDARD CAM FOLLOWER		
PART NO.	CR-4		
DRAWN BY	BSK	DATE	07/01/96
CHECKED BY		FILENAME	CRASSYS/4