| SYM | REVISION | BY | DATE |
|---|---|---|---|
| | | | |

SCALE: ~

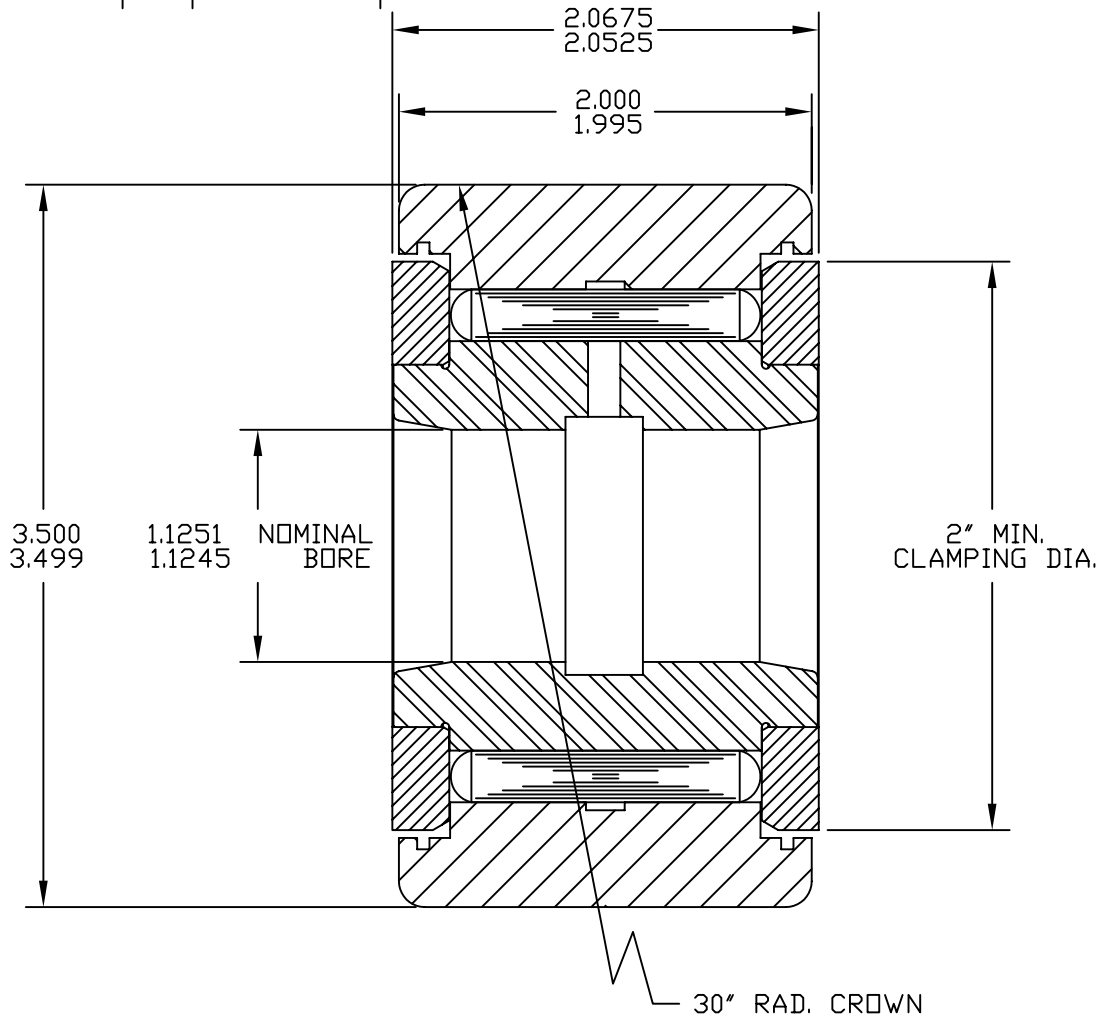


BASIC DYNAMIC CAPACITY - 22050

MAT'L: ST'D BEARING STEELS, SEALS-ACETAL.
BEARING PACKED WITH GENERAL PURPOSE EP GREASE.

TOLERANCES
UNLESS OTHERWISE NOTED
FRACTIONS: ±.010 ANGLES: ±.5
2 PLACE DECIMALS (.00): ±.005
3 PLACE DECIMALS (.000): ±.002

ABC Inc.

ACCURATE BUSHING CO. INC.
Manufacturers of SMITH® Bearing Product
443 NORTH AVENUE
Garwood, NJ 07027

| | | | |
|---|---|---|---|
| PART NAME | STANDARD CAM FOLLOWER | | |
| PART NO. | YR-3-1/2-C | | |
| DRAWN BY | JC | DATE | 7/5/11 |
| CHECKED BY | | FILENAME | YRASSYM\3-1-2-C |