| SYM | REVISION | BY | DATE |
|---|---|---|---|
| A | REVISED & REDRAWN | BSK | 8/9/95 |
| | | | |

SCALE: 1.5x

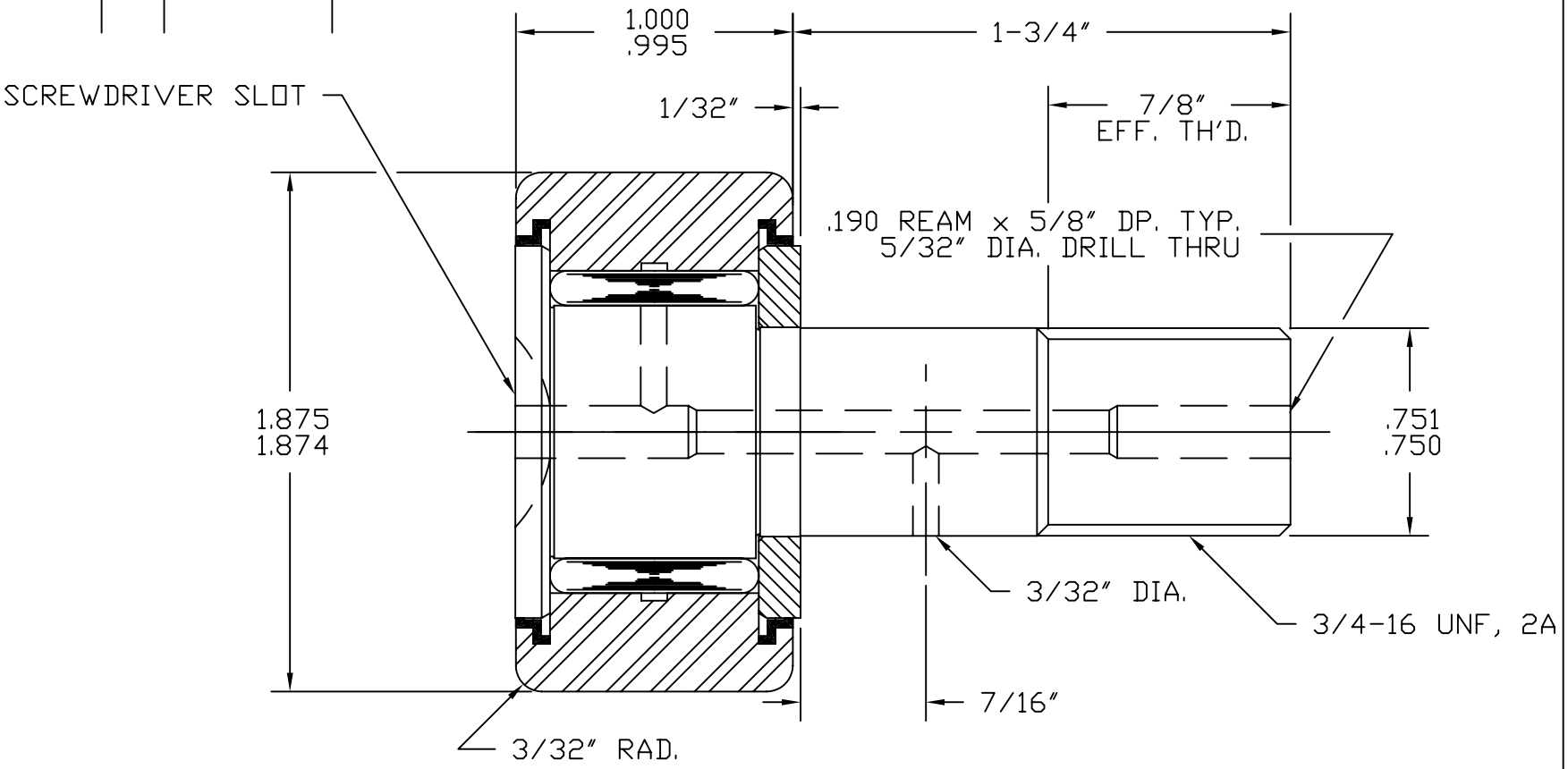


BASIC DYNAMIC CAPACITY - 6070
MAX. ALLOWABLE LOAD - 5400

MAT'L: ST'D BEARING STEELS, SEALS - ACETAL.
BEARING PACKED WITH GENERAL PURPOSE EP GREASE.
RELUBE PROVISIONS WILL ACCEPT 3/16" DRIVE TYPE FITTINGS, PLUGS SUPPLIED FOR UNUSED HOLES.

TOLERANCES
UNLESS OTHERWISE NOTED
FRACTIONS: ±.010 ANGLES: ±.5
2 PLACE DECIMALS (.00): ±.005
3 PLACE DECIMALS (.000): ±.002

ABC Inc.

ACCURATE BUSHING CO. INC.
Manufacturers of SMITH® Bearing Product
443 NORTH AVENUE
Garwood, NJ 07027

| | | | |
|---|---|---|---|
| PART NAME | STANDARD CAM FOLLOWER | | |
| PART NO. | CR-1-7/8-X | | |
| DRAWN BY | BSK | DATE | 8/9/95 |
| CHECKED BY | | FILENAME | \CRASSYS\1-7-8-X |