SYM	REVISION	BY	DATE
A	REVISED & REDRAWN	BSK	7/31/95

NOT TO SCALE

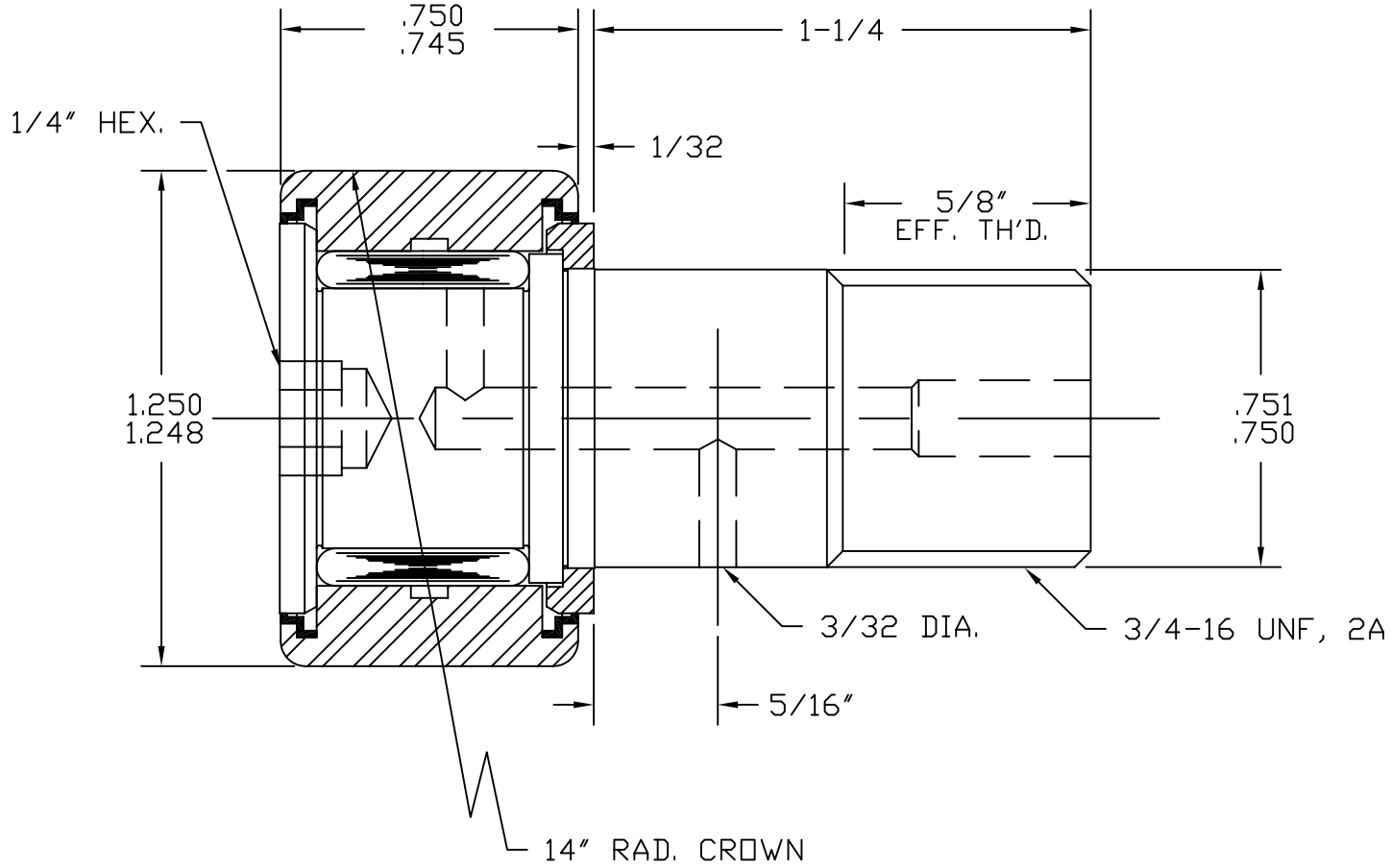

BASIC DYNAMIC CAPACITY - 3390
MAX. ALLOWABLE LOAD - 4000

MAT'L: ST'D BEARING STEELS, SEALS - ACETAL.
BEARING PACKED WITH GENERAL PURPOSE EP GREASE.
RELUBE PROVISIONS WILL ACCEPT 3/16" DRIVE TYPE
FITTINGS, PLUGS SUPPLIED FOR UNUSED HOLES.

TOLERANCES
UNLESS OTHERWISE NOTED
FRACTIONS: ±.010 ANGLES: ±.5
2 PLACE DECIMALS (.00): ±.005
3 PLACE DECIMALS (.000): ±.002

ABC Inc.

ACCURATE BUSHING CO. INC.
Manufacturers of SMITH® Bearing Product
443 NORTH AVENUE
Garwood, NJ 07027

PART NAME	STANDARD CAM FOLLOWER		
PART NO.	HR-1-1/4-XBC		
DRAWN BY	BSK	DATE	7/31/95
CHECKED BY		FILENAME	HRASSYS\1-1-4-XBC