SYM	REVISION	BY	DATE

SCALE: ~

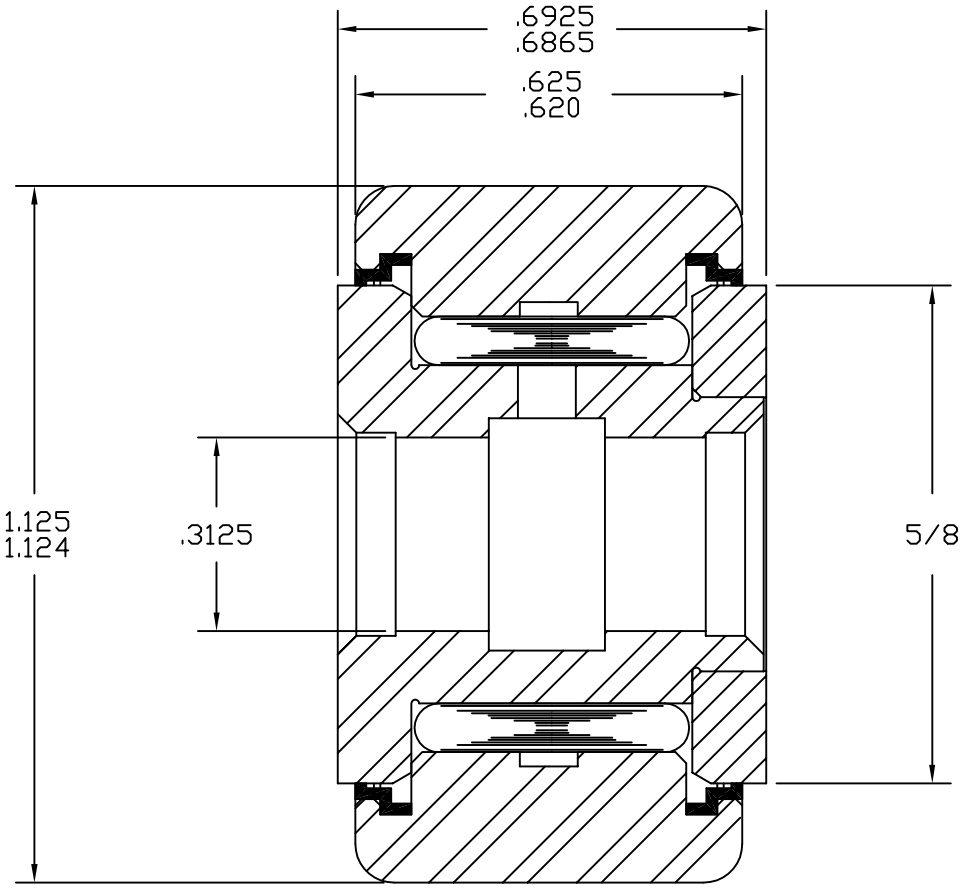

MAT'L: STAINLESS STEEL 440C AMS 5630., SEALS - ACETAL.
BEARING PACKED WITH GENERAL PURPOSE EP GREASE.
RELUBE PROVISIONS THRU BORE.

TOLERANCES
UNLESS OTHERWISE NOTED
FRACTIONS: ±.010 ANGLES: ±.5
2 PLACE DECIMALS (.00): ±.005
3 PLACE DECIMALS (.000): ±.002

ABC Inc.

ACCURATE BUSHING CO. INC.
Manufacturers of SMITH® Bearing Product
443 NORTH AVENUE
Garwood, NJ 07027

PART NAME	STANDARD STL STL YOKE ROLLER		
PART NO.	YR-1-1/8-X-SS		
DRAWN BY	JC	DATE	4/13/11
CHECKED BY		FILENAME	YRASSYS\1-1-8-X-SS