SYM	REVISION	BY	DATE

SCALE: ~

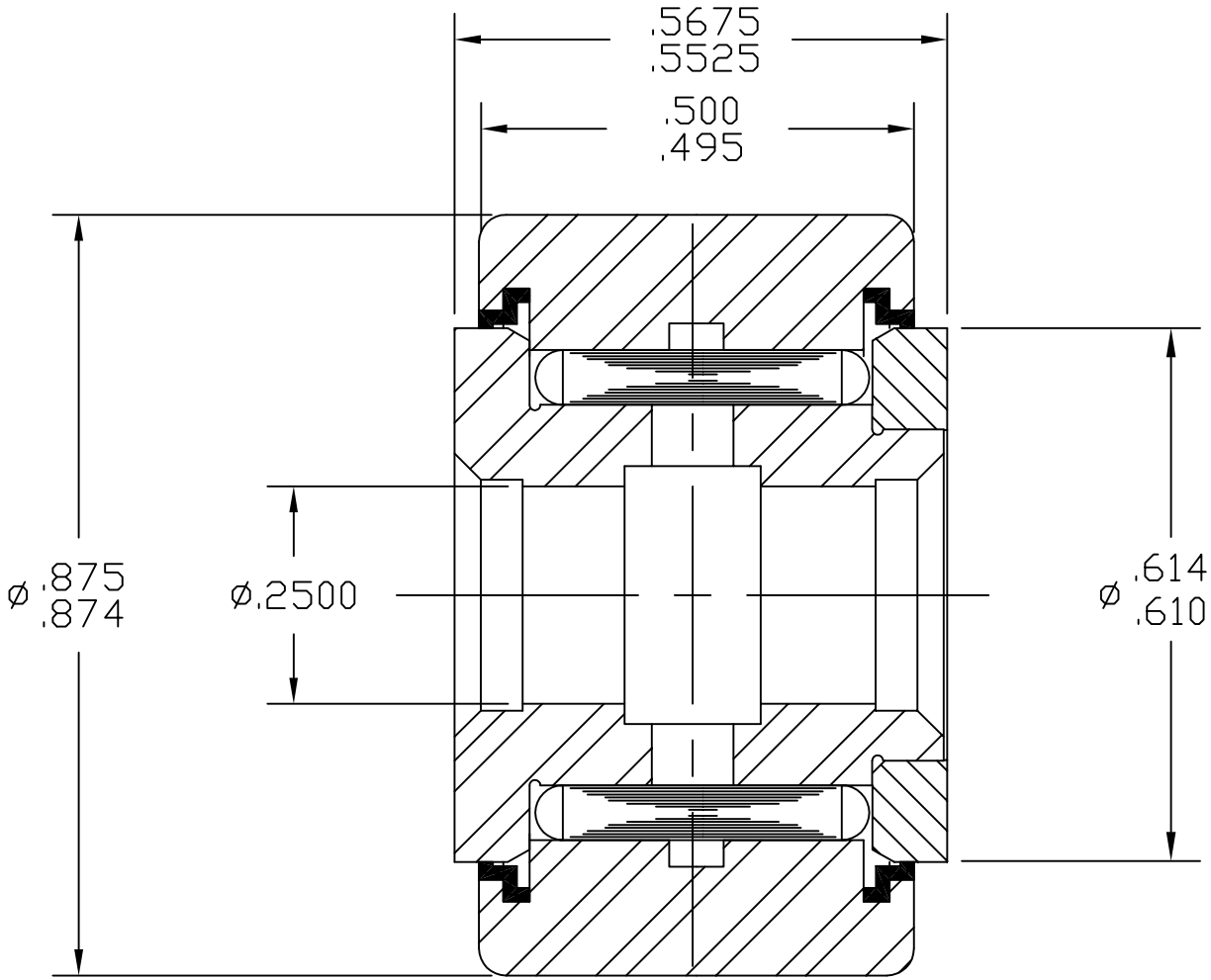

MAT'L: STAINLESS STEELS, SEALS - ACETAL.
BEARING PACKED WITH GENERAL PURPOSE EP GREASE.
RELUBE PROVISIONS THRU BORE.

TOLERANCES
UNLESS OTHERWISE NOTED
FRACTIONS: ±.010 ANGLES: ±.5
2 PLACE DECIMALS (.00): ±.005
3 PLACE DECIMALS (.000): ±.002

ABC Inc.

ACCURATE BUSHING CO. INC.
Manufacturers of SMITH® Bearing Product
443 NORTH AVENUE
Garwood, NJ 07027

PART NAME	STAINLESS STEEL YOKE ROLLER		
PART NO.	YR-7/8-X-SS		
DRAWN BY	JC	DATE	6/18/08
CHECKED BY		FILENAME	YRASSYS\7-8-X-SS