SYM	REVISION	BY	DATE

SCALE ~

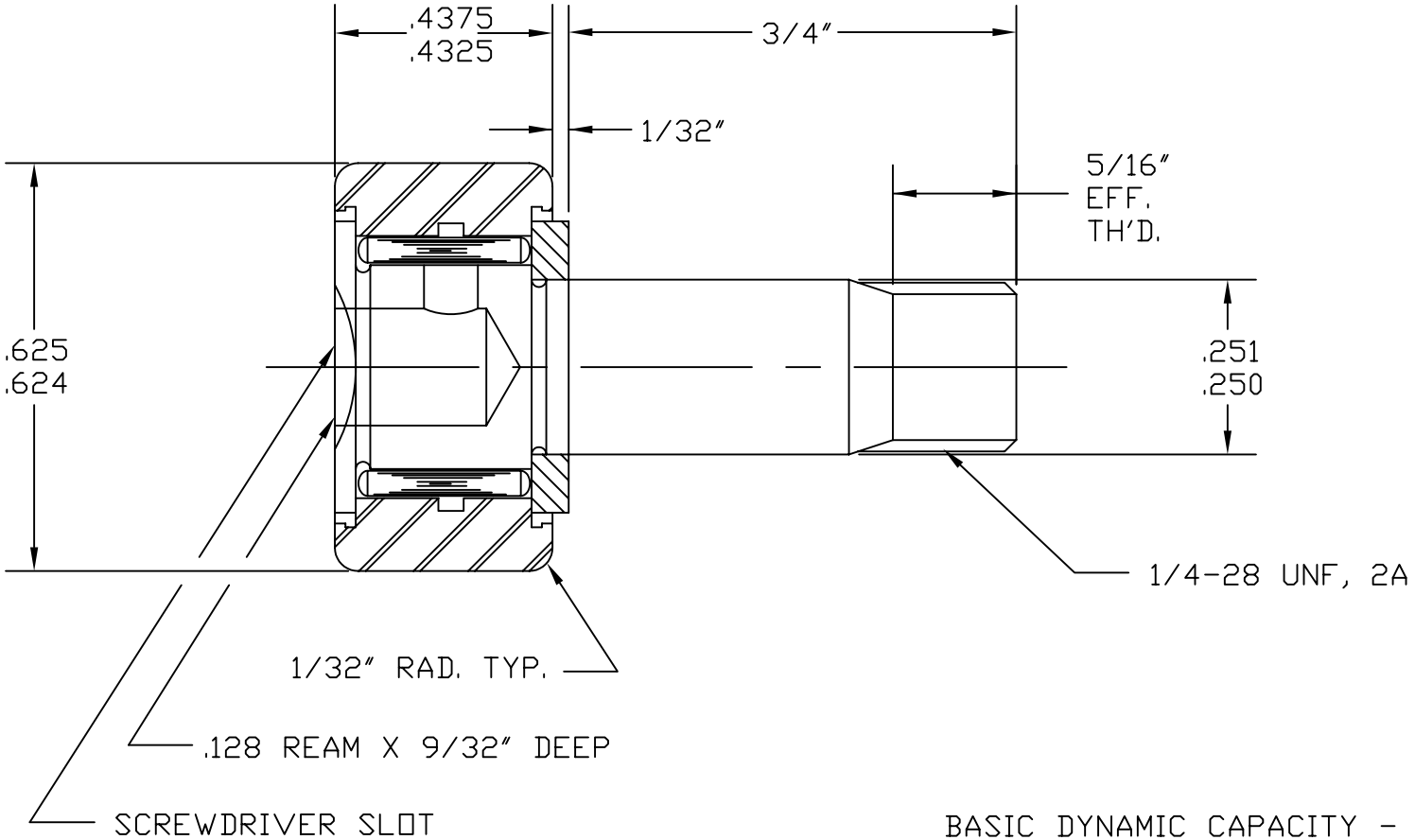

BASIC DYNAMIC CAPACITY - 940

MAX. ALLOWABLE LOAD - 590

MAT'L: ST'D BEARING STEELS
BEARING PACKED WITH GENERAL PURPOSE EP GREASE.
RELUBE PROVISIONS WILL ACCEPT 1/8″ DRIVE TYPE
FITTINGS, PLUGS SUPPLIED FOR UNUSED HOLES.

TOLERANCES

FRACTIONS ± .010 ANGLES ± .5
2 PLACE DECIMALS (.00) ± .005
3 PLACE DECIMALS (.000) ± .002

ABC Inc.

ACCURATE BUSHING CO. INC.
443 North Avenue
Garwood, NJ 07027

PART NAME	CAM FOLLOWER		
PART NO.	CR-5/8		
DRAWN BY	JMK	DATE	02/04/94
CHECKED BY		FILENAME	\CRASSYS\5-8