| SYM | REVISION | BY | DATE |
|---|---|---|---|
| A | REVISED & REDRAWN | BSK | 7/24/95 |
| | | | |

SCALE: ~

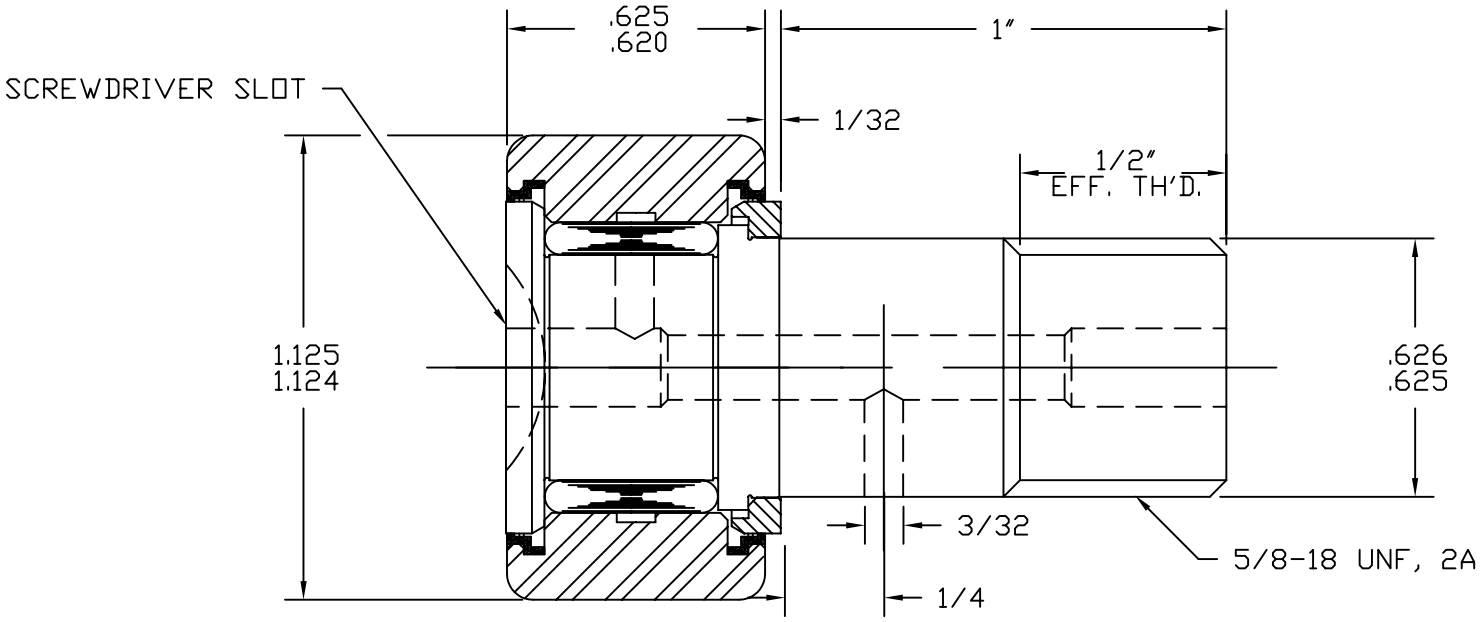


BASIC DYNAMIC CAPACITY - 2190
MAX. ALLOWABLE LOAD - 3300

MAT'L: ST'D BEARING STEELS, SEALS-ACETAL.
BEARING PACKED WITH GENERAL PURPOSE EP GREASE.
RELUBE PROVISIONS WILL ACCEPT 3/16" DRIVE TYPE
FITTINGS, PLUGS SUPPLIED FOR UNUSED HOLES.

TOLERANCES
UNLESS OTHERWISE NOTED
FRACTIONS: ±.010 ANGLES: ±.5
2 PLACE DECIMALS (.00): ±.005
3 PLACE DECIMALS (.000): ±.002

ABC Inc.

ACCURATE BUSHING CO. INC.
Manufacturers of SMITH® Bearing Product
443 NORTH AVENUE
Garwood, NJ 07027

| | | | |
|---|---|---|---|
| PART NAME | STANDARD CAM FOLLOWER | | |
| PART NO. | HR-1-1-8-X | | |
| DRAWN BY | BSK | DATE | 7/24/95 |
| CHECKED BY | | FILENAME | \HRASSYS\1-1-8-X |