SYM	REVISION	BY	DATE
~	~	~	~

SCALE: ACTUAL

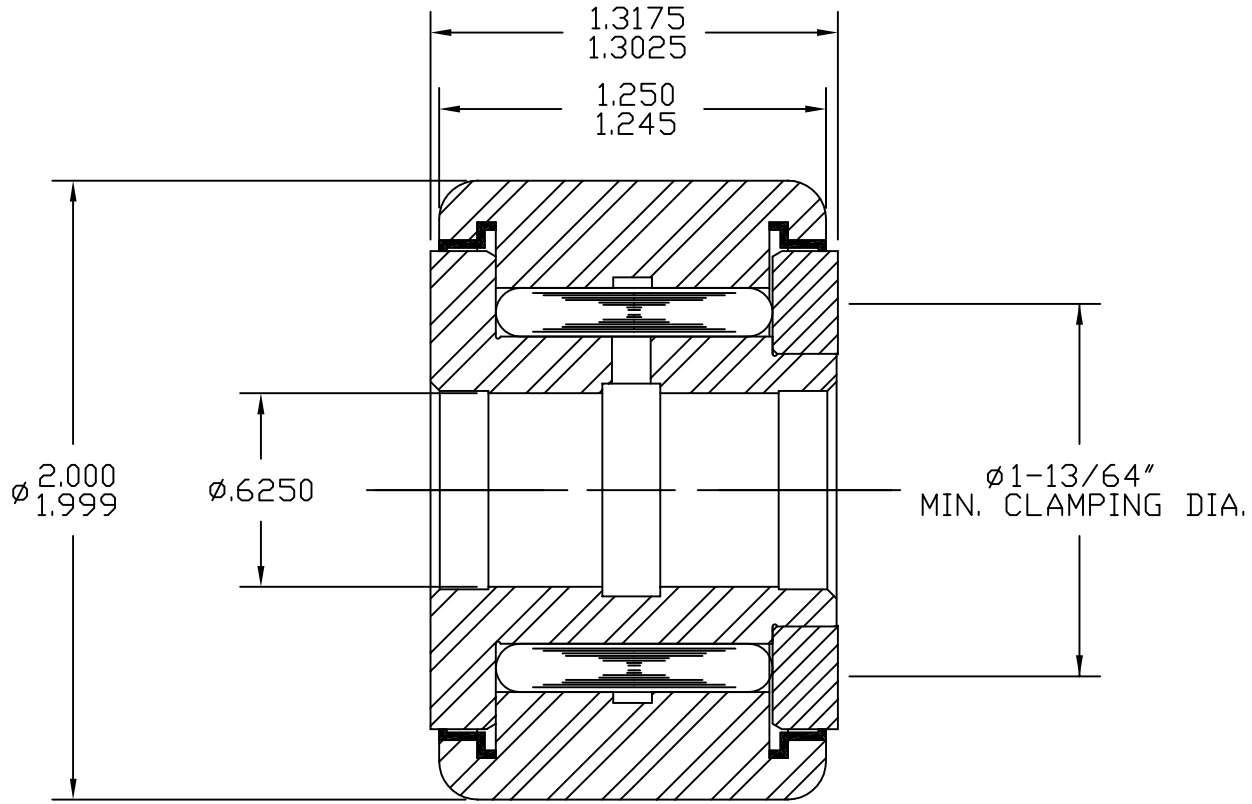

MAT'L: INNER RACE, OUTER RACE, AND ENDWASHER
STAINLESS STEEL PER AMS 5630 (440-C), Rc 55-58
ROLLS - 52100 BEARING STEEL, Rc 58-62
SEALS - ACETAL

BEARING PACKED WITH GENERAL PURPOSE EP GREASE.

TOLERANCES
UNLESS OTHERWISE NOTED
FRACTIONS: ±.010 ANGLES: ±.5
2 PLACE DECIMALS (.00): ±.005
3 PLACE DECIMALS (.000): ±.002

ABC Inc.

ACCURATE BUSHING CO. INC.
Manufacturers of SMITH® Bearing Product
443 NORTH AVENUE
Garwood, NJ 07027

PART NAME	STAINLESS STEEL YOKE ROLLER		
PART NO.	YR-2-X-SS		
DRAWN BY	JC	DATE	4/15/08
CHECKED BY		FILENAME	YRASSYS\2-X-SS