The Timken Company
4500 Mt Pleasant St. NW
N. Canton, OH 44720
Phone: (234) 262-3000
E-Mail: CustomerCAD@timken.com • **Web site:** www.timken.com

Part Number TCJT 1 15/16, Fafnir® Two-Bolt Flanged Units Eccentric Locking Collar



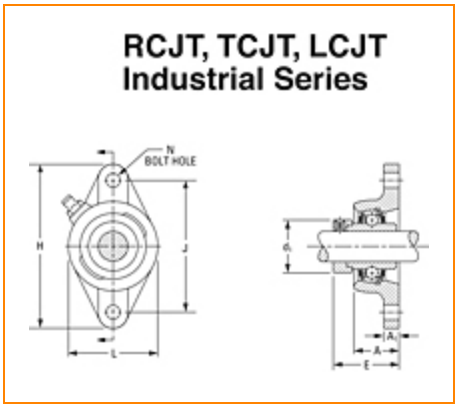

Specifications | Dimensions | Basic Load Ratings

Specifications

Shaft Size d	49.2 mm
Bearing Type	Ball Bearing
Bearing Number	G1115KPPB3
Dimension E	66.4 mm
Inside Ring Outside Diameter	69.3 mm
e	2.615 mm
Series	Industrial
Weight	2.724 Kg
Seal Type	Tri-Ply Seal
Housing Construction	Two-Bolt Flange
Alternate Part Name	TCJT1 15/16

Dimensions

Housing Width A	42.9 mm
Total Length H	188.9 mm
Total Height L	115.9 mm
Bolt Hole Spacing J	157.2 mm
Bolt Hole Size N	17.1 mm
Flange Thickness A1	12.70 mm
Center of Bearing from Housing End A2	1.116 mm
Inside Ring Width B	0 mm

Basic Load Ratings

Static Load Rating	23200 N
Dynamic Load Rating	38900 N

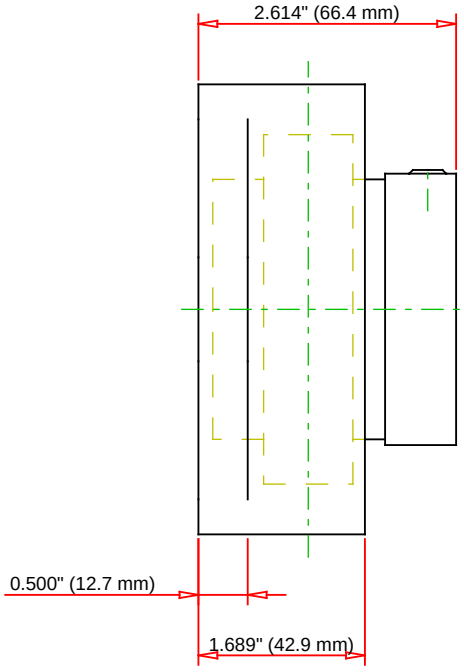

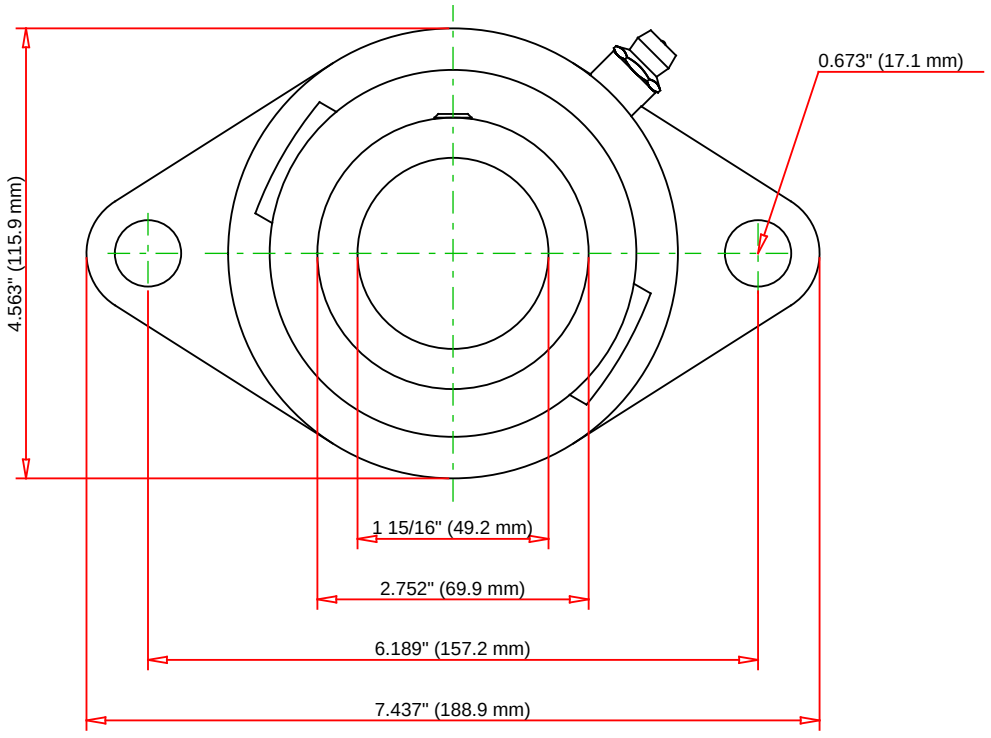

Bearing Number	G1115KPPB3			
Load Ratings - C_r	8740	lbf	38900	N
Load Ratings - C_{0r}	5210	lbf	23200	N
Weight	6.005	lb	2.724	kg

TIMKEN

THE TIMKEN COMPANY
NORTH CANTON, OHIO USA

TCJT 1 15/16

Fafnir® Two-Bolt Flanged Units Eccentric Locking Collar

Every reasonable effort has been made to ensure the accuracy of the information contained in this writing, but no liability is accepted for errors, omissions or for any other reason.

FOR DISCUSSION ONLY