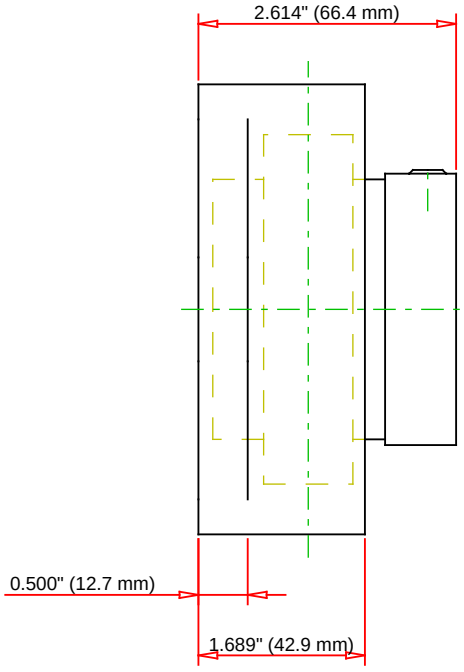

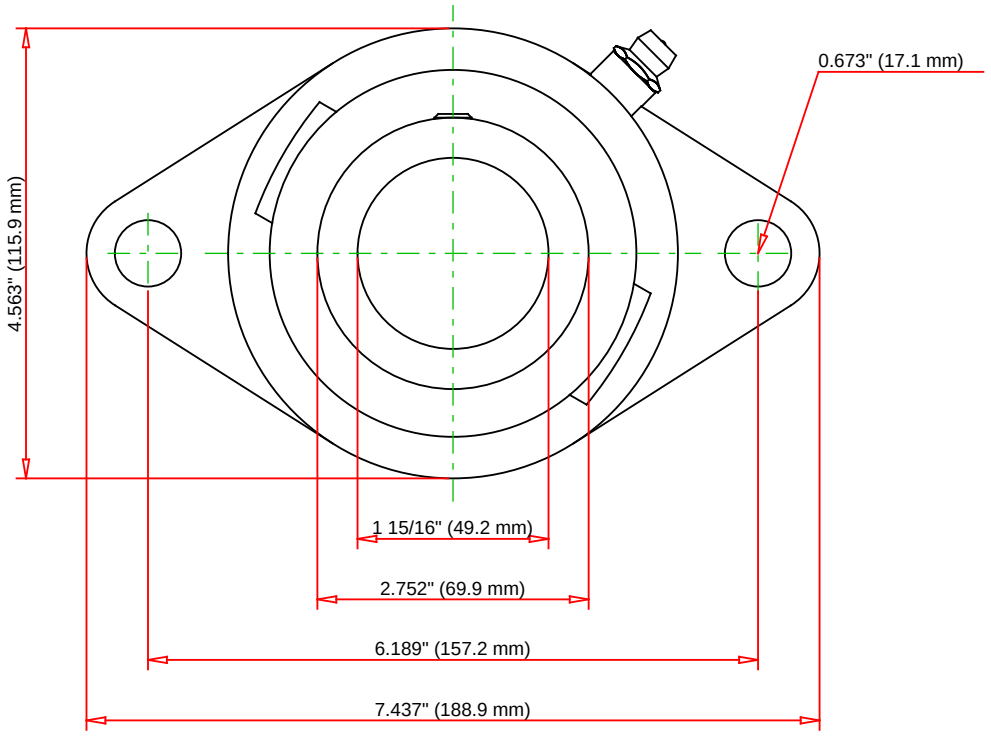

Bearing Number	G1115KPPB3			
Load Ratings - C_r	8740	lbf	38900	N
Load Ratings - C_{0r}	5210	lbf	23200	N
Weight	6.005	lb	2.724	kg

TIMKEN

THE TIMKEN COMPANY
NORTH CANTON, OHIO USA

TCJT 1 15/16

Fafnir® Two-Bolt Flanged Units Eccentric Locking Collar

Every reasonable effort has been made to ensure the accuracy of the information contained in this writing, but no liability is accepted for errors, omissions or for any other reason.

FOR DISCUSSION ONLY