The Timken Company
4500 Mt Pleasant St. NW
N. Canton, OH 44720
Phone: (234) 262-3000
E-Mail: CustomerCAD@timken.com • **Web site:** www.timken.com

Timken Part Number AN 36-W 36, Inch Accessories - Locknut and Lockwasher

- The chart below shows dimensions for locknuts and lockwashers used in the mounting of straight bore bearings on shafts.
- Other dimensions and tolerances related to shaft configurations are also shown.
- Dimensions are presented according to bearing bore size and are applicable to bearings in the various series (e.g., 222 and 223 etc.).

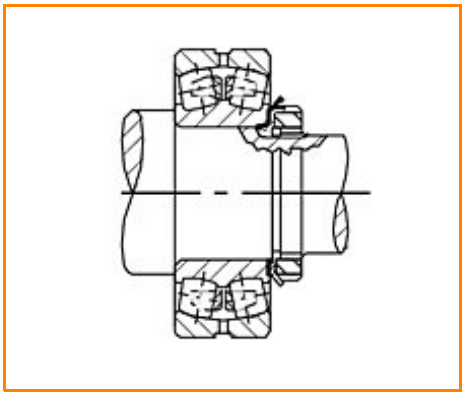

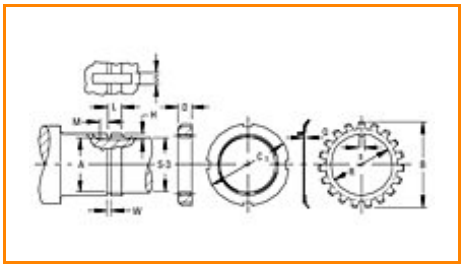

Specifications | Threads | Shaft | Locknut | Lockwasher

Specifications

Bearing Bore	180 mm
Threads No. per Inch	8
Locknut	AN 36
Lockwasher	W 36

Threads

Max. Major Diameter	179.48 mm 7.066 in

Min. Major Diameter	179.09 mm 7.0508 in
Max. Pitch Diameter	177.41 mm 6.9848 in
Min. Pitch Diameter	177.18 mm 6.9757 in
Minor Diameter	175.58 mm 6.9126 in

Shaft

Relief Diameter A	174.79 mm 6.8813 in
Diameter S-3	174.63 mm 6 7/8 in
W[1]	6.4 mm 1/4 in
L[2]	31.80 mm 1.2500 in
H[3]	6.0 mm 15/64 in
S[4]	18.2 mm 19.1 mm 0.715 in 3/4 in
M[5]	9.50 mm 3/8 in

Locknut

C_1	230.20 mm 9 1/16 in

D	28.00 mm 1.1040 in

Lockwasher

Q	4.00 mm 0.156 in
R	183.0 mm 7.206 in
B	239.70 mm 9 7/16 in

[1] Tolerance -0 to + 0.4 mm (-0 to +1/64 in)
[2] Tolerance -0 to + 0.4 mm (-0 to +1/64 in)
[3] Tolerance -0 to + 0.4 mm (-0 to +1/64 in)
[4] Tolerance -0 to + 0.4 mm (-0 to +1/64 in)
[5] Tolerance -0 to + 0.4 mm (-0 to +1/64 in)