TIMKEN



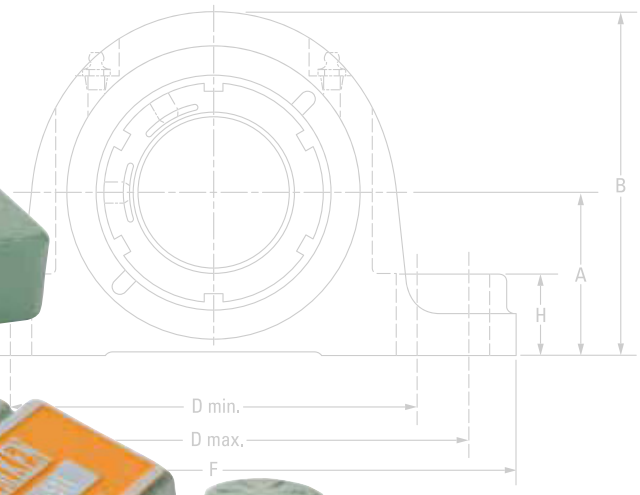



TIMKEN® SAF SPLIT-BLOCK HOUSED UNITS



TIMKEN® HOUSED UNIT CATALOG INDEX

OVERVIEW. 2
INTRODUCTION 4
SHELF LIFE POLICY 10

Timken® SAF Split-Block Housed Units D-1



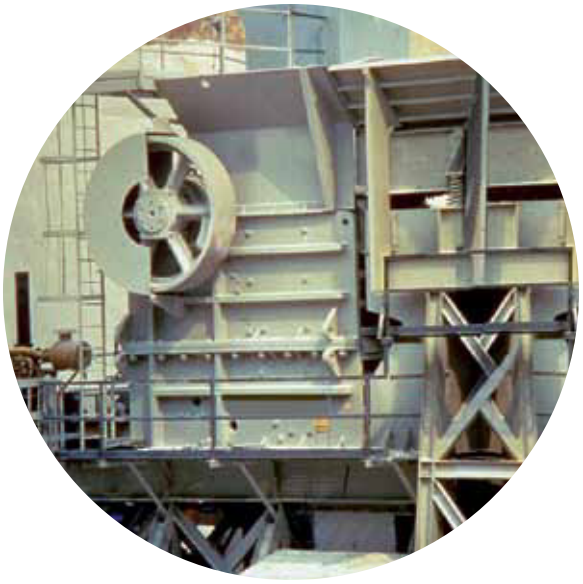



GROW STRONGER WITH TIMKEN

Every day, people around the world count on the strength of Timken. Our expertise in metallurgy, friction management and mechanical power transmission helps them accelerate improvements in productivity and uptime.

We supply products and services that can help keep your operations moving forward, whether you need drive train kits for commercial vehicles, durable housings for bearings in dirty environments, couplings that avoid metal-to-metal contact between motors and gearboxes, repair services for rail bearings, steel for an aircraft engine shaft, or other products and services for your applications.

When you choose Timken, you receive more than high-quality products and services: You gain a worldwide team of highly trained and experienced Timken people committed to working collaboratively with you to improve your business.

Globally, our 20,000 people provide reliable answers for a wide range of operations in manufacturing, mining, medical equipment, aerospace, transportation, oil and gas – and other diverse industries.



INCREASE YOUR EQUIPMENT UPTIME

In addition to high-quality bearings, engineered steel and mechanical power transmission components, we provide valuable integrated products and services. For example, we offer repair services and equipment monitoring equipment that can alert you to problems before they impact your uptime.

Additionally, we offer a broad selection of seals, premium lubricants, lubricators, couplings and chain to keep your operations moving smoothly.

Our 10 technology centers in the United States, Europe and Asia help pioneer tomorrow's innovations with extensive basic and applied scientific research programs. Through internal development and strategic acquisition of innovative companies, we continue to expand our portfolio of highly engineered bearings, steel and components.



RUGGED TIMKEN® HOUSED UNITS HELP PROTECT YOUR BEARINGS

When you choose sturdy Timken housings, your bearings can keep rolling smoothly, even in harsh environments impacted by dirt, debris, water and other contaminants. Timken engineers designed special housings to withstand tough challenges on the job.



Protected inside durable cast iron or steel, our highly engineered Timken® ball and roller bearings work hard to help you manufacture and transport materials, without excessive maintenance due to contaminants.

Choose from our selection of housed units designed with ball, tapered and spherical bearings. Select enhancements like Timken® seals, lubricants and housing covers best suited for each task. Our engineers help you choose the right combination of bearings and accessories to extend bearing life, increase uptime and reduce maintenance costs.

Of course, you can interchange existing products with Timken housed units because our bolt holes and shaft centerline dimensions are designed to conform to industry standards.

Timken® housed units reflect our strengths in metallurgy, engineering and manufacturing. We produce all our bearings in adherence with the Timken Quality Management System for consistency in all our facilities around the world.

TIMKEN® BALL HOUSED UNITS OFFER EASY INSTALLATION, FLEXIBLE OPTIONS

Timken® ball housed units, available in a variety of sizes and types, feature wide-inner-ring ball bearings that provide additional shaft support and locking options. The Timken® wide-inner-ring ball bearing is designed for straight shafts and can be positioned without shoulders, locknuts or adapters.

For easy installation, our ball housed units can be ordered pre-assembled with bearings, housings, seals and locking systems. Choose from pillow blocks, flanged cartridges, take-up units and cylindrical cartridges. Our cast-iron, pressed-steel and other optional materials give you durable choices for the exterior covers. Timken® locking options include set screws, self-locking collars and concentric collars.

Timken® Shaft Guarding Technology™ deters set-screw damage to shafts by placing a hardened band in the groove along the inner ring of the bearing. The set screws press against the band to transfer gripping pressure onto the shaft, preventing nicks, as well as raised-metal or permanent shaft damage. The stainless-steel band resists corrosion on the shaft. This system is particularly helpful for applications where it would be expensive and time-consuming to replace shafts.

TYPICAL INDUSTRIES AND APPLICATIONS

Use Timken ball bearing housed units in agricultural applications, fans, blowers, food processing devices and conveyors.



TIMKEN® TYPE E HOUSED UNITS REPEL CONTAMINANTS, ENHANCE PERFORMANCE

Timken® Type E tapered roller bearing housed units feature double-lip seals and locking collars that protect against water and other contaminants. This double-lip seal design blocks debris and retains grease better than single-lip or triple-lip seals, according to Timken 2012 laboratory tests.

Its cast-iron exterior includes a corrosion-resistant electro-coat finish for the housing and collar, a more durable shield than industry-standard powder coating or black oxide. Set screws with nylon patches reduce back-out, even in rigorous applications.

Premium Timken® tapered roller bearings inside Type E housings are manufactured with advanced technology that results in longer predicted useful bearing life than other housed units with standard bearings. Designed with optimized bearing profiles and improved surface finishes, Timken tapered roller bearings operate efficiently within the housing.

TYPICAL INDUSTRIES AND APPLICATIONS

Use Timken Type E housings for pulp and paper, power generation, mining, cement and aggregate industries. Our Type E housed units also are widely used in equipment for air-handling and treatment of water and waste water. Other common machine applications include mixers, washers, shredders, mills and oven/furnace roller beds.



TIMKEN® SPHERICAL ROLLER BEARING SOLID-BLOCK HOUSED UNITS WITHSTAND HARSH CONDITIONS

Timken® spherical roller bearing solid-block housed units stand up to rugged conditions. Composed of solid steel, they withstand most falling debris and handle up to ±1.5 degrees of misalignment. The steel used in these products is up to two times stronger than cast iron, which may break or pound out in tough applications.

Timken spherical roller bearing solid-block housed units come in five locking configurations: single and double set screws, eccentric locks for reversing applications, tapered-adaptor locks and double-tapered locks.

Choose from three sealing options: labyrinth seals (for high-speed, high-temperature applications) and triple-lip seals made of either nitrile or urethane. Timken® steel auxiliary covers provide an extra layer of protection, and they can be filled with Timken lubricants.

TYPICAL INDUSTRIES AND APPLICATIONS

Use Timken spherical roller bearing solid-block housed units in metals mills, aggregate and cement, mining, power generation, agriculture, pulp, paper, sawmills and other forest industries.



TIMKEN® SAF SPLIT-BLOCK HOUSED UNITS BEAR HEAVY LOADS

Timken® SAF split-block housed units are available in rugged cast iron, ductile iron or cast steel to match a range of industrial environments. Our Timken SAF housed units have separate, matched caps and bases. In larger sizes where housed units are heavier, this split-block design eases installation. Remove the cap using a pry-tool slot for bearing inspection, service and replacement.

Available in a variety of shaft sizes, Timken SAF units offer the choice of tapered-bore design for easy mounting or a straight-bore design for better axial location. The block can be converted from fixed to float by removing the stabilizing ring. Several sealing options protect against contamination, including a standard seal, which is a precision aluminum triple-ring labyrinth seal.

TYPICAL INDUSTRIES AND APPLICATIONS

Use Timken SAF housed bearings in power generation, coal, mining, aggregate, cement, metals, pulp, paper and other forestry operations, water treatment and food processing industries. Applications include warehousing, conveyors, movable bridges/heavy structures, industrial fans and blowers.





HOW TO USE THIS CATALOG

We designed this catalog to help you find the Timken housed units best suited to your specifications.

Timken offers an extensive range of bearings and accessories in both imperial and metric sizes. For your convenience, size ranges are indicated in millimeters and inches. Contact your Timken engineer to learn more about our complete line for the special needs of your application.

This publication contains dimensions, tolerances and load ratings, as well as engineering sections describing fitting practices for shafts and housings, internal clearances, materials and other bearing features. It provides valuable assistance in the initial consideration of the type and characteristics of the bearings that may best suit your particular needs.

ISO and ANSI/ABMA, as used in this publication, refer to the International Organization for Standardization and the American National Standards Institute/American Bearing Manufacturers Association.

Updates are made periodically to this catalog. Visit www.timken.com for the most recent version of the Timken® Housed Unit Catalog.

DISCLAIMER

This catalog is provided solely to give you analysis tools and data to assist you in your product selection. Product performance is affected by many factors beyond the control of Timken. Therefore, you must validate the suitability and feasibility of all product selections for your applications.

Timken products are sold subject to Timken terms and conditions of sale, which include our limited warranty and remedy. You can find these at http://www.timken.com/en-us/purchase/Pages/TermsandConditionsofSale.aspx.

Please consult with your Timken engineer for more information and assistance.

Every reasonable effort has been made to ensure the accuracy of the information in this writing, but no liability is accepted for errors, omissions or for any other reason.

SHELF LIFE AND STORAGE OF GREASE-LUBRICATED BEARINGS AND COMPONENTS

To help you get the most value from our products, Timken provides guidelines for the shelf life of grease-lubricated ball and roller bearings, components and assemblies. Shelf life information is based on Timken and industry test data and experience.



SHELF LIFE POLICY

Shelf life should be distinguished from lubricated bearing/component design life as follows:

- Shelf life of the grease-lubricated bearing/component represents the period of time prior to use or installation.
- The shelf life is a portion of the anticipated aggregate design life. It is impossible to accurately predict design life due to variations in lubricant bleed rates, oil migration, operating conditions, installation conditions, temperature, humidity and extended storage.
- Shelf life values, available from Timken, represent a maximum limit and assume adherence to the storage and handling guidelines suggested in this catalog or by a Timken associate. Deviations from the Timken storage and handling guidelines may reduce shelf life. Any specification or operating practice that defines a shorter shelf life should be used.

Timken cannot anticipate the performance of the grease lubricant after the bearing or component is installed or placed in service.

TIMKEN IS NOT RESPONSIBLE FOR THE SHELF LIFE OF ANY BEARING/COMPONENT LUBRICATED BY ANOTHER PARTY.

European REACH Compliance

Timken lubricants, greases and similar products sold in standalone containers or delivery systems are subject to the European REACH (**R**egistration, **E**valuation, **A**uthorization and Restriction of **CH**emicals) directive. For import into the European Union, Timken can sell and provide only those lubricants and greases that are registered with ECHA (**E**uropean **CH**emical **A**gency). For further information, please contact your Timken engineer.



STORAGE

Timken suggests the following storage guidelines for our finished products (bearings, components and assemblies, referred to as "products"):

- Unless directed otherwise by Timken, products should be kept in their original packaging until they are ready to be placed into service.
- Do not remove or alter any labels or stencil markings on the packaging.
- Products should be stored in such a way that the packaging is not pierced, crushed or otherwise damaged.
- After a product is removed from its packaging, it should be placed into service as soon as possible.
- When removing a product that is not individually packaged from a bulk pack container, the container should be resealed immediately after the product is removed.
- Do not use product that has exceeded its shelf life as defined in the Timken shelf life guidelines statement.
- The storage area temperature should be maintained between 0° C (32° F) and 40° C (104° F); temperature fluctuations should be minimized.
- The relative humidity should be maintained below 60 percent and the surfaces should be dry.
- The storage area should be kept free from airborne contaminants such as, but not limited to, dust, dirt, harmful vapors, etc.
- The storage area should be isolated from undue vibration.
- Extreme conditions of any kind should be avoided.

Due to the fact that Timken is not familiar with your particular storage conditions, we strongly suggest following these guidelines. However, you may be required by circumstances or applicable government requirements to adhere to stricter storage requirements.



Most bearing components typically ship protected with a corrosion-preventive compound that is not a lubricant. These components may be used in oil-lubricated applications without removal of the corrosion-preventive compound. When using some specialized grease lubrications, we advise you to remove the corrosion-preventive compound before packing the bearing components with suitable grease.

We pre-pack most housed unit types in this catalog with general-purpose grease suitable for their normal applications. It may be necessary for you to frequently replenish the grease for optimum performance.

Be careful in selecting lubrication, however, since different lubricants are often incompatible. You may order housed units pre-lubricated with a specified lubrication.

When you receive a bearing or housed unit shipment, do not remove products from their packaging until they are ready for mounting so they do not become corroded or contaminated.

Store bearings and housed units in an appropriate atmosphere so they remain protected for the intended period.

⚠ WARNING

Failure to observe the following warnings could create a risk of death or serious injury.

Proper maintenance and handling practices are critical. Failure to follow selection recommendations and installation instructions and to maintain proper lubrication can result in equipment failure.

Overheated bearings can ignite explosive atmospheres. Special care must be taken to properly select, install, maintain, and lubricate housed unit bearings that are used in or near atmospheres that may contain explosive levels of combustible gases or accumulations of dust such from grain, coal, or other combustible materials. Consult your equipment designer or supplier for installation and maintenance instructions.

⚠ CAUTION

Failure to follow these cautions could create a risk of injury.

Do not use damaged housed units. The use of a damaged housed unit can result in equipment damage and/or injury.

CAUTION

Failure to follow these cautions may result in property damage.

If hammer and bar are used for installation or removal of a part, use a mild steel bar (e.g., 1010 or 1020 grade). Mild steel bars are less likely to cause release of high-speed fragments from the hammer, bar or the part being removed.

Warnings for this product line are in this catalog and posted on www.timken.com/en-us/products/warnings/Pages/TimkenHousedUnitWarnings.aspx.

NOTE

Do not use excessive force when mounting or dismounting the unit.

Follow all tolerance, fit, and torque recommendations.

Always follow the Original Equipment Manufacturer's installation and maintenance guidelines.

Ensure proper alignment.

Never weld housed units.

Do not heat components with an open flame.

Do not operate at bearing temperatures above 121° C (250° F).

D

TIMKEN® SAF SPLIT-BLOCK HOUSED UNITS

Timken's split-block spherical pillow blocks combine rugged cast-iron or cast-steel housings with high-capacity spherical roller bearings to meet the toughest demands of heavy industry. The convenient split-housing design simplifies assembly and service. Each pillow block contains an advanced-design spherical roller bearing with improved geometry and raceway finish for optimal load capacity and service life. Timken manufactures pillow blocks in two main styles: SAF and SDAF. The larger SDAF block is suggested for extremely heavy duty applications.

Updates are made periodically to this catalog. Visit www.timken.com for the most recent version of the Timken® Housed Unit Catalog.

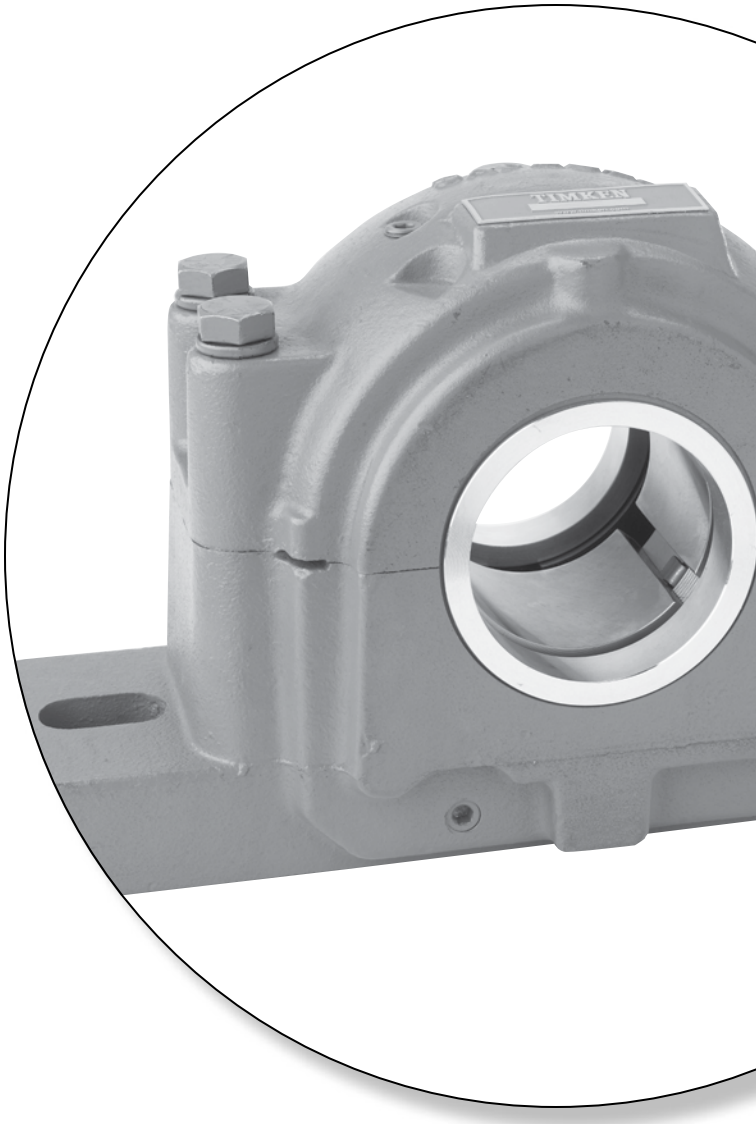

TYPICAL INDUSTRIES AND APPLICATIONS

Common uses include processing and material handling equipment found in many industries, including power generation (coal), mining, aggregate, cement, metal mills, pulp, paper and other forestry operations, water treatment and food processing. Applications include conveyors, movable bridges/heavy structures, industrial fans and blowers.

Engineering D-3
SAF Lubrication D-23
Spherical Roller Bearing Nomenclature D-36
Spherical Roller Bearing Product Data Tables D-37
SAF Housed Unit Nomenclature D-46
SAF Housed Unit Introduction D-47
SAF Pillow Block Product Data Tables D-50
SAF Spherical Roller Bearing Inch Accessories D-83

⚠ WARNING

Failure to observe the following warnings could create a risk of death or serious injury.

Proper maintenance and handling practices are critical. Always follow installation instructions and maintain proper lubrication.

Overheated bearings can ignite explosive atmospheres. Special care must be taken to properly select, install, maintain, and lubricate housed unit bearings that are used in or near atmospheres that may contain explosive levels of combustible gases or accumulations of dust such as from grain, coal, or other combustible materials. Consult your equipment designer or supplier for installation and maintenance instructions.

⚠ CAUTION

Failure to follow these cautions could create a risk of injury.

Do not use damaged housed units. The use of a damaged housed unit can result in equipment damage and/or injury.

CAUTION

Failure to follow these cautions may result in property damage.

If hammer and bar are used for installation or removal of a part, use a mild steel bar (e.g., 1010 or 1020 grade). Mild steel bars are less likely to cause release of high-speed fragments from the hammer, bar or the part being removed.

Warnings for this product line are in this catalog and posted on www.timken.com/en-us/products/warnings/Pages/TimkenHousedUnitWarnings.aspx.

NOTE

Do not use excessive force when mounting or dismounting the unit.

Follow all tolerance, fit and torque recommendations.

Always follow the Original Equipment Manufacturer's installation and maintenance guidelines.

Ensure proper alignment.

Never weld housed units.

Do not heat components with an open flame.

Do not operate at bearing temperatures above 121°C (250°F).

DISCLAIMER

This catalog is provided solely to give you analysis tools and data to assist you in your product selection. Product performance is affected by many factors beyond the control of Timken. Therefore, you must validate the suitability and feasibility of all product selections for your applications.

Timken products are sold subject to Timken terms and conditions of sale, which include our limited warranty and remedy. You can find these at http://www.timken.com/en-us/purchase/Pages/TermsandConditionsofSale.aspx.

Please consult with your Timken engineer for more information and assistance.

Every reasonable effort has been made to ensure the accuracy of the information in this writing, but no liability is accepted for errors, omissions or for any other reason.

Updates are made periodically to this catalog. Visit www.timken.com for the most recent version of the Timken® Housed Unit Catalog.

ENGINEERING

The following topics are covered within this engineering section:

- Spherical roller bearing design types.
- Shaft fitting practice and mounting recommendations.

This engineering section is not intended to be comprehensive, but does serve as a useful guide in spherical roller bearing and SAF pillow block housing selection.

To view the complete engineering catalog, please visit www.timken.com. To order the catalog, please contact your Timken engineer and request a copy of the Timken Engineering Manual, order number 10424.

Radial Spherical Roller Bearing Types and Cages. D-4
Spherical Roller Bearing Tolerances D-4
Spherical Roller Bearing Mounting, Fitting,
Setting and Installation. D-7
Shaft Fits for Cylindrical Bore Bearings. D-15
Fitting Practice Tables. D-16

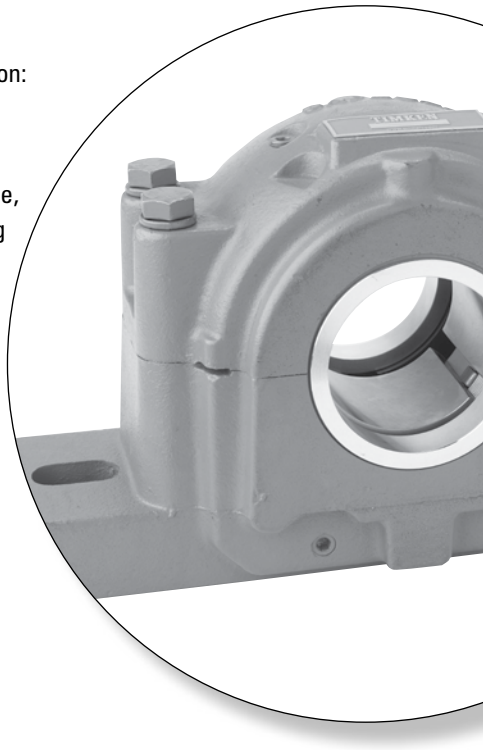

RADIAL SPHERICAL ROLLER BEARING TYPES AND CAGES

The principle styles of radial spherical roller bearings that Timken offers are:

- ≤280 mm bore: EJ, EM and EMB
- >280 mm bore: YM and YMB

Above suffixes correspond to different types of designs depending on a bearing size and geometry. Main differences are the cage type used in the assembly. Spherical roller bearings with an EJ cage suffix are fitted with a stamped-steel cage. YM/EM/YMB suffixes are used with brass cage designs.

The newly redesigned Timken® EJ, EM and EMB bearings offer higher load ratings, increased thermal speed ratings and reduced operating temperatures compared to the previous offering.

In addition to these improvements, cage designs vary between the different styles as noted below.

Style	Cage Design
EJ	Land-riding steel cage; one per row
EM/YM	Roller-riding one-piece brass cage
EMB/YMB	Land-riding one-piece brass cage

Most Timken® spherical roller bearings are available with a cylindrical bore as well as a tapered bore. Tapered bore bearing part numbers are designated with a K suffix.

METRIC SYSTEM TOLERANCES

Spherical roller bearings are manufactured to a number of specifications, with each having classes that define tolerances on dimensions such as bore, O.D., width and runout. Metric bearings have been manufactured to corresponding standard negative tolerances.

The following table summarizes the different specifications and classes for spherical roller bearings and other available Timken bearing lines. For the purposes of this catalog, ISO specifications are shown for spherical roller bearings.

Boundary dimension tolerances for spherical roller bearing usage are listed in the following tables. These tolerances are provided for use in selecting bearings for general applications, in conjunction with the bearing mounting and fitting practices offered in later sections.

TABLE D-1. BEARING SPECIFICATIONS AND CLASSES

System	Specification	Bearing Type	Standard Bearing Class		Precision Bearing Class			
Metric	ISO/DIN	All Bearing Types	P0	P6	P5	P4	P2	—
Imperial	ABMA	Spherical	RBEC 1	RBEC 3	RBEC 5	RBEC 7	RBEC 9	—

Standard Timken radial spherical roller bearings maintain normal tolerances according to ISO 492. Tables D-2 and D-3 list the critical tolerances for these bearing types. Timken SAF housings are supplied with bearings that conform to ISO P0, or standard tolerances.

The term deviation is defined as the difference between a single ring dimension and the nominal dimension. For metric tolerances, the nominal dimension is at a +0 mm (0 in.) tolerance. The deviation is the tolerance range for the listed parameter. Variation is defined as the difference between the largest and smallest measurements of a given parameter for an individual ring.

TABLE D-2. SPHERICAL ROLLER BEARING TOLERANCES – INNER RING (METRIC)[1]

Bearing Bore		Bore Deviation[2] Δ_{dmp}			Width Variation V_{BS}			Radial Runout K_{ia}			Face Runout with Bore S_d	Axial Runout S_{ia}	Width Deviation Inner & Outer Rings[2] Δ_{Bs} and Δ_{Cs}	
Over	Incl.	P0	P6	P5	P0	P6	P5	P0	P6	P5	P5	P5	P0, P6	P5
mm in.	**mm** in.	**mm** in.	**mm** in.	**mm** in.	**mm** in.	**mm** in.	**mm** in.	**mm** in.	**mm** in.	**mm** in.	**mm** in.	**mm** in.	**mm** in.	**mm** in.
2.5000 0.0984	**10.000** 0.3937	**-0.008** -0.0003	**-0.007** -0.0003	**-0.005** -0.0002	**0.015** 0.0006	**0.015** 0.0006	**0.005** 0.0002	**0.010** 0.0004	**0.006** 0.0002	**0.004** 0.0002	**0.007** 0.0003	**0.007** 0.0003	**-0.120** -0.0047	**-0.040** -0.0157
10.000 0.3937	**18.000** 0.7087	**-0.008** -0.0003	**-0.007** -0.0003	**-0.005** -0.0002	**0.020** 0.0008	**0.020** 0.0008	**0.005** 0.0002	**0.010** 0.0004	**0.007** 0.0003	**0.004** 0.0002	**0.007** 0.0003	**0.007** 0.0003	**-0.120** -0.0047	**-0.080** -0.0031
18.000 0.7087	**30.000** 1.1811	**-0.010** -0.0004	**-0.008** -0.0003	**-0.006** -0.0002	**0.020** 0.0008	**0.020** 0.0008	**0.005** 0.0002	**0.013** 0.0005	**0.008** 0.0003	**0.004** 0.0002	**0.008** 0.0003	**0.008** 0.0003	**-0.120** -0.0047	**-0.120** -0.0047
30.000 1.1811	**50.000** 1.9685	**-0.012** -0.0005	**-0.010** -0.0004	**-0.008** -0.0003	**0.020** 0.0008	**0.020** 0.0008	**0.005** 0.0002	**0.015** 0.0006	**0.010** 0.0004	**0.005** 0.0002	**0.008** 0.0003	**0.008** 0.0003	**-0.120** -0.0047	**-0.120** -0.0047
50.000 1.9685	**80.000** 3.1496	**-0.015** -0.0006	**-0.012** -0.0005	**-0.009** -0.0004	**0.025** 0.0010	**0.025** 0.0010	**0.006** 0.0002	**0.020** 0.0008	**0.010** 0.0004	**0.005** 0.0002	**0.008** 0.0003	**0.008** 0.0003	**-0.150** -0.0059	**-0.150** -0.0059
80.000 3.1496	**120.000** 4.7244	**-0.020** -0.0008	**-0.015** -0.0006	**-0.010** -0.0004	**0.025** 0.0010	**0.025** 0.0010	**0.007** 0.0003	**0.025** 0.0010	**0.013** 0.0005	**0.006** 0.0002	**0.009** 0.0004	**0.009** 0.0004	**-0.200** -0.0079	**-0.200** -0.0079
120.000 4.7244	**150.000** 5.9055	**-0.025** -0.0010	**-0.018** -0.0007	**-0.013** -0.0005	**0.030** 0.0012	**0.030** 0.0012	**0.008** 0.0003	**0.030** 0.0012	**0.018** 0.0007	**0.008** 0.0003	**0.010** 0.0004	**0.010** 0.0004	**-0.250** -0.0098	**-0.250** -0.0098
150.000 5.9055	**180.000** 7.0866	**-0.025** -0.0010	**-0.018** -0.0007	**-0.013** -0.0005	**0.030** 0.0012	**0.030** 0.0012	**0.008** 0.0003	**0.030** 0.0012	**0.018** 0.0007	**0.008** 0.0003	**0.010** 0.0004	**0.010** 0.0004	**-0.250** -0.0098	**-0.250** -0.0098
180.000 7.0866	**250.000** 9.8425	**-0.030** -0.0012	**-0.022** -0.0009	**-0.015** -0.0006	**0.030** 0.0012	**0.030** 0.0012	**0.010** 0.0004	**0.040** 0.0016	**0.020** 0.0008	**0.010** 0.0004	**0.011** 0.0004	**0.013** 0.0005	**-0.300** -0.0018	**-0.300** -0.0018
250.000 9.8425	**315.000** 12.4016	**-0.035** -0.0014	**-0.025** -0.0010	**-0.018** -0.0007	**0.035** 0.0014	**0.035** 0.0014	**0.013** 0.0005	**0.050** 0.0020	**0.025** 0.0010	**0.013** 0.0005	**0.013** 0.0005	**0.015** 0.0006	**-0.350** -0.0138	**-0.350** -0.0138
315.000 12.4016	**400.000** 15.7480	**-0.040** -0.0016	**-0.030** -0.0012	**-0.023** -0.0009	**0.040** 0.0016	**0.040** 0.0016	**0.015** 0.0006	**0.060** 0.0024	**0.030** 0.0012	**0.015** 0.0006	**0.015** 0.0006	**0.020** 0.0008	**-0.400** -0.0157	**-0.400** -0.0157
400.000 15.7480	**500.000** 19.6850	**-0.045** -0.0018	**-0.035** -0.0014	–	**0.050** 0.0020	**0.045** 0.0018	–	**0.065** 0.0026	**0.035** 0.0014	–	–	–	**-0.450** -0.0177	–
500.000 19.6850	**630.000** 24.8031	**-0.050** -0.0020	**-0.040** -0.0016	–	**0.060** 0.0024	**0.050** 0.0020	–	**0.070** 0.0028	**0.040** 0.0016	–	–	–	**-0.500** -0.0197	–
630.000 24.8031	**800.000** 31.4961	**-0.075** -0.0030	–	–	**0.070** 0.0028	–	–	**0.080** 0.0031	–	–	–	–	**-0.750** -0.0295	–

[1]Symbol definitions are found on pages 32-33 of the Timken Engineering Manual (order number 10424).
[2]Tolerance range is from +0 to value listed.
NOTE: Tolerance and shaft diameters are shown in the table as variances from nominal bearing bore.

TABLE D-3. SPHERICAL ROLLER BEARING TOLERANCES – OUTER RING (METRIC)[1]

Bearing O.D.		Outside Deviation[2] Δ_{Dmp}			Width Variation V_{CS}		Radial Runout K_{ea}			Axial Runout S_{ea}	Outside Diameter Runout With Face S_D
Over	Incl.	P0	P6	P5	P0	P6	P0	P6	P5	P5	P5
mm in.	**mm** in.	**mm** in.	**mm** in.	**mm** in.	**mm** in.	**mm** in.	**mm** in.	**mm** in.	**mm** in.	**mm** in.	**mm** in.
0.000 0.0000	**18.000** 0.7087	**-0.008** -0.0003	**-0.007** -0.0003	**-0.005** -0.0002	**0.015** 0.0006	**0.005** 0.0002	**0.015** 0.0006	**0.008** 0.0003	**0.005** 0.0002	**0.008** 0.0003	**0.008** 0.0003
18.000 0.7087	**30.000** 1.1811	**-0.009** -0.0004	**-0.008** -0.0003	**-0.006** -0.00024	**0.020** 0.0008	**0.005** 0.0002	**0.015** 0.0006	**0.009** 0.0004	**0.006** 0.00024	**0.008** 0.0003	**0.008** 0.0003
30.000 1.1811	**50.000** 1.9685	**-0.011** -0.0004	**-0.009** -0.0004	**-0.007** -0.0003	**0.020** 0.0008	**0.005** 0.0002	**0.020** 0.0008	**0.010** 0.0004	**0.007** 0.0003	**0.008** 0.0003	**0.008** 0.0003
50.000 1.9685	**80.000** 3.1496	**-0.013** -0.0005	**-0.011** -0.0004	**-0.009** -0.0004	**0.025** 0.0010	**0.006** 0.00024	**0.025** 0.0010	**0.013** 0.0005	**0.008** 0.0003	**0.010** 0.0004	**0.008** 0.0003
80.000 3.1496	**120.000** 4.7244	**-0.015** -0.0006	**-0.013** -0.0005	**-0.010** -0.0004	**0.025** 0.0010	**0.008** 0.0003	**0.035** 0.0014	**0.018** 0.0007	**0.010** 0.0004	**0.011** 0.0004	**0.009** 0.0004
120.000 4.7244	**150.000** 5.9055	**-0.018** -0.0007	**-0.015** -0.0006	**-0.011** -0.0004	**0.030** 0.0012	**0.008** 0.0003	**0.040** 0.0016	**0.020** 0.0008	**0.011** 0.0004	**0.013** 0.0005	**0.010** 0.0004
150.000 5.9055	**180.000** 7.0866	**-0.025** -0.0010	**-0.018** -0.0007	**-0.013** -0.0005	**0.030** 0.0012	**0.008** 0.0003	**0.045** 0.0018	**0.023** 0.0009	**0.013** 0.0005	**0.014** 0.0006	**0.010** 0.0004
180.000 7.0866	**250.000** 9.8425	**-0.030** -0.0012	**-0.020** -0.0008	**-0.015** -0.0006	**0.030** 0.0012	**0.010** 0.0004	**0.050** 0.0020	**0.025** 0.0010	**0.015** 0.0006	**0.015** 0.0006	**0.011** 0.0004
250.000 9.8425	**315.000** 12.4016	**-0.035** -0.0014	**-0.025** -0.0010	**-0.018** -0.0007	**0.035** 0.0014	**0.011** 0.0004	**0.060** 0.0024	**0.030** 0.0012	**0.018** 0.0007	**0.018** 0.0007	**0.013** 0.0005
315.000 12.4016	**400.000** 15.7480	**-0.040** -0.0016	**-0.028** -0.0011	**-0.020** -0.0008	**0.040** 0.0016	**0.013** 0.0005	**0.070** 0.0028	**0.035** 0.0014	**0.020** 0.0008	**0.020** 0.0008	**0.013** 0.0005
400.000 15.7480	**500.000** 19.6850	**-0.045** -0.0018	**-0.033** -0.0013	**-0.023** -0.0009	**0.045** 0.0018	**0.015** 0.0006	**0.080** 0.0031	**0.040** 0.0016	**0.023** 0.0009	**0.023** 0.0009	**0.015** 0.0006
500.000 19.6850	**630.000** 24.8031	**-0.050** -0.0020	**-0.038** -0.0015	**-0.028** -0.0011	**0.050** 0.0020	**0.018** 0.0007	**0.100** 0.0039	**0.050** 0.0020	**0.025** 0.0010	**0.025** 0.0010	**0.018** 0.0007
630.000 24.8031	**800.000** 31.4961	**-0.075** -0.0030	**-0.045** -0.0018	**-0.035** -0.0014	–	**0.020** 0.0008	**0.120** 0.0047	**0.060** 0.0024	**0.030** 0.0012	**0.030** 0.0012	**0.020** 0.0008
800.000 31.4961	**1000.000** 39.3701	**-0.100** -0.0040	**-0.060** -0.0024	–	–	–	**0.140** 0.0055	**0.075** 0.0030	–	–	–
1000.000 39.3701	**1250.000** 49.2126	**-0.125** -0.0050	–	–	–	–	**0.160** 0.0063	– –	–	–	–

[1]Symbol definitions are found on pages 32-33 of the Timken Engineering Manual (order number 10424).
[2]Tolerance range is from +0 to value listed.
NOTE: Tolerance and shaft diameters are shown in the table as variances from nominal bearing bore.

SPHERICAL ROLLER BEARING MOUNTING, FITTING, SETTING AND INSTALLATION

MOUNTING

Spherical roller bearings can be mounted individually, but most often are mounted in combination with another spherical roller bearing or a cylindrical roller bearing.

With spherical roller bearings, typically one bearing is fixed axially and the other is mounted with loose fits and axial space. This allows movement or float for environmental conditions such as uneven thermal growth between shaft and housing. In SAF housings, a stabilizing ring, sometimes called a locating ring, is provided. When this ring is installed in the assembly, it creates a fixed bearing. When it is removed, and the bearing is properly located in the housing, the bearing can float freely.

Fig. D-1 shows a fixed SAF housing with a stabilizing ring installed and a float bearing without the stabilizing ring.

FITTING PRACTICE

Tables D-6 through D-8 on pages D-15 through D-21 list the recommended fitting practice for spherical roller bearing inner rings on shafts. The tables assume:

- The bearing is of normal precision.
- The shaft is solid and made from steel.
- The bearing seats are ground or accurately turned to less than approximately 1.6 Ra finish.

The suggested fit symbols are in accordance with ISO 286. For help with recommended fitting practice, contact your Timken engineer.

As a general guideline, rotating inner rings should be applied with an interference fit. Loose fits may permit the inner rings to creep or turn, and wear the shaft and the backing shoulder. This wear may result in excessive bearing looseness and possible bearing and shaft damage. Additionally, abrasive metal particles resulting from creep or turning may enter into the bearing and cause damage and vibration.

The load conditions and bearing envelope dimensions should be used to select the suggested shaft fit from the tables.

Timken SAF housings are supplied with a predetermined loose fit practice for the bearing O.D. Contact your Timken engineer if you require the specific fit practice used for a given SAF housing.

⚠ WARNING

Failure to observe the following warnings could create a risk of death or serious injury.

Proper maintenance and handling practices are critical. Always follow installation instructions and maintain proper lubrication.

Overheated bearings can ignite explosive atmospheres. Special care must be taken to properly select, install, maintain, and lubricate housed unit bearings that are used in or near atmospheres that may contain explosive levels of combustible gases or accumulations of dust such as from grain, coal, or other combustible materials. Consult your equipment designer or supplier for installation and maintenance instructions.

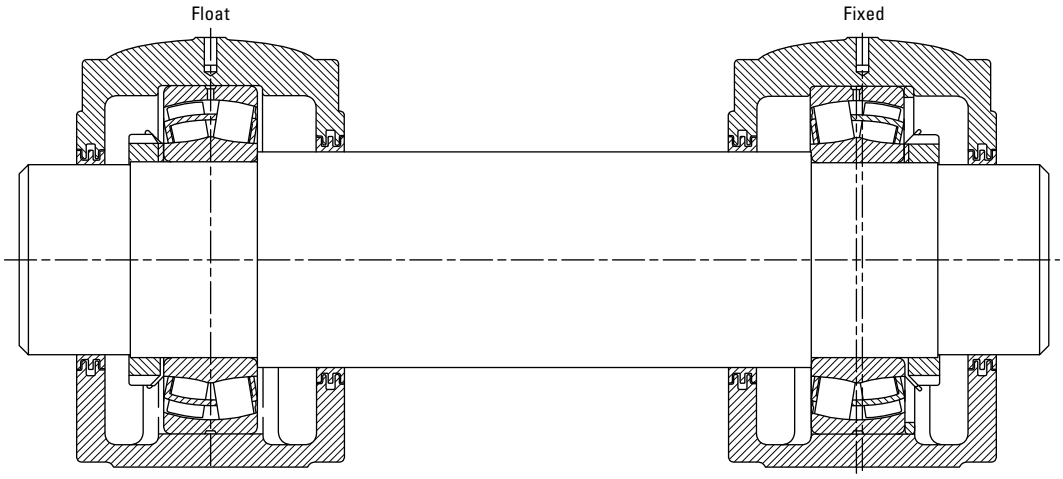

Fig. D-1. Spherical roller bearing direct mounting.

TAPERED BORE DESIGNS

Typically, tapered bore bearings are selected to simplify shaft mounting and dismounting. Since the spherical roller bearing is not separable, mounting can be simplified by use of an adapter sleeve with a cylindrical bore and tapered O.D. A tapered bore roller bearing also can be mounted directly onto a tapered shaft.

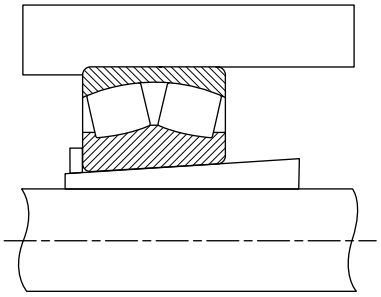

Fig. D-2. Spherical roller bearing mounted with an adapter sleeve.

Bearings with a tapered bore typically require a tighter fit on the shaft than bearings with a cylindrical bore. A locknut is typically used to drive the inner ring up a tapered shaft sleeve. The locknut position is then secured by use of a lockwasher or lockplate. Timken offers a wide range of accessories to ease the assembly of spherical roller bearings with a tapered bore (see page D-11). For approximating the clearance loss for axial drive-up, an 85 percent radial loss approximation can be used. That is, the radial clearance loss per axial drive-up can roughly be approximated as 71 µm/mm for a 1:12 tapered. Table D-5 on page D-10 provides a direct relation between suggested RIC (radial internal clearance) reduction due to installation and the corresponding axial displacement of the inner ring.

SETTING

To achieve appropriate operating clearance, attention must be paid to the effects that fitting practice and thermal gradients have within the bearing.

FITTING PRACTICE

- An interference fit between the inner ring and a solid steel shaft will reduce the radial clearance within the bearing by approximately 80 percent of the fit.
- Spherical roller bearings with a tapered bore require a slightly greater interference fit on the shaft than a cylindrical bore bearing.

NOTE

It is critical to select the RIC that allows for this reduction.

THERMAL GRADIENTS

- Thermal gradients within the bearing are primarily a function of the bearing rotational speed. As speed increases, thermal gradients increase, thermal growth occurs and the radial clearance is reduced.
- As a rule of thumb, radial clearance should be increased for speeds in excess of 70 percent of the speed rating.

For help selecting the correct radial internal clearance for your application, consult with your Timken engineer.

Radial internal clearance tolerances are listed in tables D-4 and D-5 for spherical roller bearings.

Spherical roller bearings are ordered with a specified standard or non-standard radial internal clearance value. The standard radial internal clearances are designated as C2, C0 (normal), C3, C4 or C5 and are in accordance with ISO 5753. C2 represents the minimum clearance and C5 represents the maximum clearance. Non-standardized values also are available by special request.

The clearance required for a given application depends on the desired operating precision, the rotational speed of the bearing, and the fitting practice used. SAF housings are supplied with a C3 clearance bearing, though other clearances may be ordered for specific applications, such as a C4 clearance for a paper machine dryer. Typically, larger clearance reduces the operating load zone of the bearing, increases the maximum roller load, and reduces the bearing's expected life. However, a spherical roller bearing that has been put into a preload condition can experience premature bearing damage caused by excessive heat generation and/or material fatigue. As a general guideline, spherical roller bearings should not operate in a preloaded condition.

TABLE D-4. RADIAL INTERNAL CLEARANCE LIMITS – SPHERICAL ROLLER BEARINGS – CYLINDRICAL BORE

Bore (Nominal)		Cylindrical Bore					
			Normal CO		C4		
			Min.	Max.	Min.	Max.	
		C2		C3		C5	
Over	Incl.	Min.	Max.	Min.	Max.	Min.	Max.
mm in.	**mm** in.	**mm** in.	**mm** in.	**mm** in.	**mm** in.	**mm** in.	**mm** in.
20 0.9449	**30** 1.1811	**0.015** 0.0006	**0.025** 0.001	**0.04** 0.0016	**0.055** 0.0022	**0.075** 0.003	**0.095** 0.0037
30 1.1811	**40** 1.5748	**0.015** 0.0006	**0.03** 0.0012	**0.045** 0.0018	**0.06** 0.0024	**0.08** 0.0031	**1** 0.0039
40 1.5748	**50** 1.9685	**0.02** 0.0008	**0.035** 0.0014	**0.055** 0.0022	**0.075** 0.003	**0.1** 0.0039	**0.125** 0.0049
50 1.9685	**65** 2.5591	**0.02** 0.0008	**0.04** 0.0016	**0.065** 0.0026	**0.09** 0.0035	**0.12** 0.0047	**0.15** 0.0059
65 2.5591	**80** 3.1496	**0.03** 0.0012	**0.05** 0.002	**0.08** 0.0031	**0.11** 0.0043	**0.145** 0.0057	**0.18** 0.0071
80 3.1496	**100** 3.9370	**0.035** 0.0014	**0.06** 0.0024	**0.1** 0.0039	**0.135** 0.0053	**0.18** 0.0071	**0.225** 0.0089
100 3.9370	**120** 4.7244	**0.04** 0.0016	**0.075** 0.003	**0.12** 0.0047	**0.16** 0.0063	**0.21** 0.0083	**0.26** 0.0102
120 4.7244	**140** 5.5118	**0.05** 0.002	**0.095** 0.0037	**0.145** 0.0057	**0.19** 0.0075	**0.24** 0.0094	**0.3** 0.0118
140 5.5118	**160** 6.2992	**0.06** 0.0024	**0.11** 0.0043	**0.17** 0.0067	**0.22** 0.0087	**0.28** 0.011	**0.35** 0.0138
160 6.2992	**180** 7.0866	**0.065** 0.0026	**0.12** 0.0047	**0.18** 0.0071	**0.24** 0.0094	**0.31** 0.0122	**0.39** 0.0154
180 7.0866	**200** 7.8740	**0.07** 0.0028	**0.13** 0.0051	**0.2** 0.0079	**0.26** 0.0102	**0.34** 0.0134	**0.43** 0.0169
200 7.8740	**225** 8.8582	**0.08** 0.0031	**0.14** 0.0055	**0.22** 0.0087	**0.29** 0.0114	**0.38** 0.015	**0.47** 0.0185
225 8.8582	**250** 9.8425	**0.09** 0.0035	**0.15** 0.0059	**0.24** 0.0094	**0.32** 0.0126	**0.42** 0.0165	**0.52** 0.0205
250 9.8425	**280** 11.0236	**0.1** 0.0039	**0.17** 0.0067	**0.26** 0.0102	**0.35** 0.0138	**0.46** 0.0181	**0.57** 0.0224
280 11.0236	**315** 12.4016	**0.11** 0.0043	**0.19** 0.0075	**0.28** 0.011	**0.37** 0.0146	**0.5** 0.0197	**0.63** 0.0248
315 12.4016	**355** 13.9764	**0.12** 0.0047	**0.2** 0.0079	**0.31** 0.0122	**0.41** 0.0161	**0.55** 0.0217	**0.69** 0.0272
355 13.9764	**400** 15.7480	**0.13** 0.0051	**0.22** 0.0087	**0.34** 0.0134	**0.45** 0.0177	**0.6** 0.0236	**0.75** 0.0295
400 15.7480	**450** 17.7165	**0.14** 0.0055	**0.24** 0.0094	**0.37** 0.0146	**0.5** 0.0197	**0.66** 0.026	**0.82** 0.0323
450 17.7165	**500** 19.6850	**0.14** 0.0055	**0.26** 0.0102	**0.41** 0.0161	**0.55** 0.0217	**0.72** 0.0283	**0.9** 0.0354
500 19.6850	**560** 22.0472	**0.15** 0.0059	**0.28** 0.011	**0.44** 0.0173	**0.6** 0.0236	**0.78** 0.0307	**1** 0.0394
560 22.0472	**630** 24.8031	**0.17** 0.0067	**0.31** 0.0122	**0.48** 0.0189	**0.65** 0.0256	**0.85** 0.0335	**1.1** 0.0433
630 24.8031	**710** 27.9528	**0.19** 0.0075	**0.35** 0.0138	**0.53** 0.0209	**0.7** 0.0276	**0.92** 0.0362	**1.19** 0.0469
710 27.9528	**800** 31.4961	**0.21** 0.0083	**0.39** 0.0154	**0.58** 0.0228	**0.77** 0.0303	**1.01** 0.0398	**1.3** 0.0512
800 31.4961	**900** 35.4331	**0.23** 0.0091	**0.43** 0.0169	**0.65** 0.0256	**0.86** 0.0339	**1.12** 0.0441	**1.44** 0.0567
900 35.4331	**1000** 39.3701	**0.26** 0.0102	**0.48** 0.0189	**0.71** 0.028	**0.93** 0.0366	**1.22** 0.048	**1.57** 0.0618

NOTE: Tolerance and shaft diameters are shown in the table as variances from nominal bearing bore.

TABLE D-5. RADIAL INTERNAL CLEARANCE LIMITS – SPHERICAL ROLLER BEARINGS – TAPERED BORE

Bore (Nominal)		Tapered Bore						Suggested Reduction of RIC Due to Installation		Axial Displacement of Inner Ring for RIC Reduction – Tapered Shaft[1][2]				Suggested RIC After Installation[1]
			Normal CO		C4					Taper 1:12		Taper 1:30		
		C2		C3		C5								
Over	Incl.	Min.	Max.	Min.	Max.	Min.	Max.	Min.	Max.	Min.	Max.	Min.	Max.	Min.
mm in.	**mm** in.	**mm** in.	**mm** in.	**mm** in.	**mm** in.	**mm** in.	**mm** in.	**mm** in.	**mm** in.	**mm** in.	**mm** in.	**mm** in.	**mm** in.	**mm** in.
20 0.9449	**30** 1.1811	**0.02** 0.0008	**0.03** 0.0012	**0.04** 0.0016	**0.055** 0.0022	**0.075** 0.003	**0.095** 0.0037	**0.015** 0.0006	**0.02** 0.0008	**0.23** 0.0091	**0.30** 0.0118	–	–	**0.015** 0.0006
30 1.1811	**40** 1.5748	**0.025** 0.001	**0.035** 0.0014	**0.05** 0.002	**0.065** 0.0026	**0.085** 0.0033	**0.105** 0.0041	**0.02** 0.0008	**0.025** 0.001	**0.30** 0.0118	**0.38** 0.0150	–	–	**0.015** 0.0006
40 1.5748	**50** 1.9685	**0.03** 0.0012	**0.045** 0.0018	**0.06** 0.0024	**0.08** 0.0031	**0.1** 0.0039	**0.13** 0.0051	**0.025** 0.001	**0.03** 0.0012	**0.38** 0.0150	**0.46** 0.0181	–	–	**0.02** 0.0008
50 1.9685	**65** 2.5591	**0.04** 0.0016	**0.055** 0.0022	**0.075** 0.003	**0.095** 0.0037	**0.12** 0.0047	**0.16** 0.0063	**0.03** 0.0012	**0.038** 0.0015	**0.46** 0.0181	**0.56** 0.0220	–	–	**0.025** 0.001
65 2.5591	**80** 3.1496	**0.05** 0.002	**0.07** 0.0028	**0.095** 0.0037	**0.12** 0.0047	**0.15** 0.0059	**0.2** 0.0079	**0.038** 0.0015	**0.051** 0.002	**0.56** 0.0220	**0.76** 0.0299	–	–	**0.025** 0.001
80 3.1496	**100** 3.9370	**0.055** 0.0022	**0.08** 0.003	**0.11** 0.0043	**0.14** 0.0055	**0.18** 0.0071	**0.23** 0.0091	**0.046** 0.0018	**0.064** 0.0025	**0.68** 0.0268	**0.97** 0.0382	–	–	**0.036** 0.0014
100 3.9370	**120** 4.7244	**0.065** 0.0026	**0.1** 0.0039	**0.135** 0.0053	**0.17** 0.0067	**0.22** 0.0087	**0.28** 0.011	**0.051** 0.002	**0.071** 0.0028	**0.76** 0.0299	**1.07** 0.0421	**1.90** 0.0748	**2.54** 0.1000	**0.051** 0.002
120 4.7244	**140** 5.5118	**0.08** 0.0031	**0.12** 0.0047	**0.16** 0.0063	**0.2** 0.0079	**0.26** 0.0102	**0.33** 0.013	**0.064** 0.0025	**0.089** 0.0035	**0.89** 0.0350	**1.27** 0.0500	**2.29** 0.0902	**3.05** 0.1201	**0.056** 0.0022
140 5.5118	**160** 6.2992	**0.09** 0.0035	**0.13** 0.0051	**0.18** 0.0071	**0.23** 0.0091	**0.3** 0.0118	**0.38** 0.015	**0.076** 0.003	**0.102** 0.004	**1.14** 0.0449	**1.52** 0.0598	**2.67** 0.1051	**3.43** 0.1350	**0.056** 0.0022
160 6.2992	**180** 7.0866	**0.1** 0.0039	**0.14** 0.0055	**0.2** 0.0079	**0.26** 0.0102	**0.34** 0.0134	**0.43** 0.0169	**0.076** 0.003	**0.114** 0.0045	**1.14** 0.0449	**1.65** 0.0650	**2.67** 0.1051	**4.06** 0.1598	**0.061** 0.0024
180 7.0866	**200** 7.8740	**0.11** 0.0043	**0.16** 0.0063	**0.22** 0.0087	**0.29** 0.0114	**0.37** 0.0146	**0.47** 0.0185	**0.089** 0.0035	**0.127** 0.005	**1.40** 0.0551	**1.90** 0.0748	**3.05** 0.1201	**4.45** 0.1752	**0.071** 0.0028
200 7.8740	**225** 8.8582	**0.12** 0.0047	**0.18** 0.0071	**0.25** 0.0098	**0.32** 0.0126	**0.41** 0.0161	**0.52** 0.0205	**0.102** 0.004	**0.14** 0.0055	**1.52** 0.0598	**2.03** 0.0799	**3.56** 0.1402	**4.83** 0.1902	**0.076** 0.003
225 8.8582	**250** 9.8425	**0.14** 0.0055	**0.2** 0.0079	**0.27** 0.0106	**0.35** 0.0138	**0.45** 0.0177	**0.57** 0.0224	**0.114** 0.0045	**0.152** 0.006	**1.78** 0.0701	**2.29** 0.0902	**4.06** 0.1598	**5.33** 0.2098	**0.089** 0.0035
250 9.8425	**280** 11.0236	**0.15** 0.0059	**0.22** 0.0087	**0.3** 0.0118	**0.39** 0.0154	**0.49** 0.0193	**0.62** 0.0244	**0.114** 0.0045	**0.165** 0.0065	**1.78** 0.0701	**2.54** 0.1000	**4.06** 0.1598	**5.84** 0.2299	**0.102** 0.004
280 11.0236	**315** 12.4016	**0.17** 0.0067	**0.24** 0.0094	**0.33** 0.013	**0.43** 0.0169	**0.54** 0.0213	**0.68** 0.0268	**0.127** 0.005	**0.178** 0.007	**1.90** 0.0748	**2.67** 0.1051	**4.45** 0.1752	**6.22** 0.2449	**0.102** 0.004
315 12.4016	**355** 13.9764	**0.19** 0.0075	**0.27** 0.0106	**0.36** 0.0142	**0.47** 0.0185	**0.59** 0.0232	**0.74** 0.0291	**0.14** 0.0055	**0.19** 0.0075	**2.03** 0.0799	**2.79** 0.1098	**4.83** 0.1902	**6.60** 0.2598	**0.114** 0.0045
355 13.9764	**400** 15.7480	**0.21** 0.0083	**0.3** 0.0118	**0.4** 0.0157	**0.52** 0.0205	**0.65** 0.0256	**0.82** 0.0323	**0.152** 0.006	**0.203** 0.008	**2.29** 0.0902	**3.05** 0.1201	**5.33** 0.2098	**7.11** 0.2799	**0.127** 0.005
400 15.7480	**450** 17.7165	**0.23** 0.0091	**0.33** 0.013	**0.44** 0.0173	**0.57** 0.0224	**0.72** 0.0283	**0.91** 0.0358	**0.165** 0.0065	**0.216** 0.0085	**2.54** 0.1000	**3.3** 0.1299	**5.84** 0.2299	**7.62** 0.3000	**0.152** 0.006
450 17.7165	**500** 19.6850	**0.26** 0.0102	**0.37** 0.0146	**0.49** 0.0193	**0.63** 0.0248	**0.79** 0.0311	**1** 0.0394	**0.178** 0.007	**0.229** 0.009	**2.67** 0.1051	**3.43** 0.1350	**6.22** 0.2449	**8.00** 0.3150	**0.165** 0.0065
500 19.6850	**560** 22.0472	**0.29** 0.0114	**0.41** 0.0161	**0.54** 0.0213	**0.68** 0.0268	**0.87** 0.0343	**1.1** 0.0433	**0.203** 0.008	**0.254** 0.01	**3.05** 0.1201	**3.81** 0.1500	**7.11** 0.2799	**8.89** 0.3500	**0.178** 0.007
560 22.0472	**630** 24.8031	**0.32** 0.0126	**0.46** 0.0181	**0.6** 0.0236	**0.76** 0.0299	**0.98** 0.0386	**1.23** 0.0484	**0.229** 0.009	**0.279** 0.011	**3.43** 0.1350	**4.19** 0.1650	**8.00** 0.3150	**9.78** 0.3850	**0.203** 0.008
630 24.8031	**710** 27.9528	**0.35** 0.0138	**0.51** 0.0201	**0.67** 0.0264	**0.85** 0.0335	**1.09** 0.0429	**1.36** 0.0535	**0.254** 0.01	**0.305** 0.012	**3.81** 0.1500	**4.57** 0.1799	**8.89** 0.3500	**10.67** 0.4201	**0.203** 0.008
710 27.9528	**800** 31.4961	**0.39** 0.0154	**0.57** 0.0224	**0.75** 0.0295	**0.96** 0.0378	**1.22** 0.048	**1.5** 0.0591	**0.279** 0.011	**0.356** 0.014	**4.19** 0.1650	**5.33** 0.2098	**9.78** 0.3850	**12.45** 0.4902	**0.229** 0.009
800 31.4961	**900** 35.4331	**0.44** 0.0173	**0.64** 0.0252	**0.84** 0.0331	**1.07** 0.0421	**1.37** 0.0539	**1.69** 0.0665	**0.305** 0.012	**0.381** 0.015	**4.57** 0.1799	**5.72** 0.2252	**10.67** 0.4201	**13.33** 0.5248	**0.252** 0.01
900 35.4331	**1000** 39.3701	**0.49** 0.0193	**0.71** 0.028	**0.93** 0.0366	**1.19** 0.0469	**1.52** 0.0598	**1.86** 0.0732	**0.356** 0.014	**0.432** 0.017	**5.33** 0.2100	**6.48** 0.2551	**12.45** 0.4902	**15.11** 0.5949	**0.279** 0.011

[1]This displacement is valid for assembly of tapered bore bearings and is measured starting from a line-to-line fit of the bearing bore to the tapered shaft.

[2]1:12 Taper used for 222, 223, 230, 231, 232, 233, 239 series. 1:30 Taper used for 240, 241, 242 series. For sleeve mounting, multiply axial displacement values by 1.1 for 1:12 Taper or by 1.05 for 1:30 Taper. For questions on tapered shaft data, consult your Timken engineer.

NOTE: Axial displacement values apply to solid steel shafts or hollow shafts with bore diameter less than half the shaft diameter. For shaft materials other than steel, or for thin-walled shafts, please consult your Timken engineer.

NOTE: Tolerance and shaft diameters are shown in the table as variances from nominal bearing bore.

EXAMPLE #1 –
Calculating RIC Reduction Using a Spherical Roller Bearing with Tapered Bore

Given bearing number 22328K C3 (140 mm bore with C3 clearance) is to be mounted on a tapered shaft. Using a set of feeler gages, RIC is measured at (see fig. D-3):

RIC = 0.178 mm (0.007 in.)

Suggested reduction of RIC due to installation = 0.064 mm – 0.089 mm (0.0025 in. – 0.0035 in.), found in table D-5 on page D-10.

Calculate the clearance after mounting (see fig. D-4):

0.178 mm – 0.076 mm = 0.102 mm *or*

(0.007 in. – 0.003 in. = 0.004 in.)

For this example, the value of 0.076 mm (0.003 in.) was obtained by taking the mid-range value of the upper and lower limits found in the tables on pages D-9 and D-10.

Therefore, the locknut should be tightened until RIC reaches 0.102 mm (0.004 in.).



Fig. D-3. Measure RIC before installation.



Fig. D-4. During mounting, the RIC should be checked at the unloaded roller.

It also should be noted that the value obtained by reading the suggested RIC after installation directly from the table is 0.056 mm (0.0022 in.). This differs from the value calculated in the example. The value taken directly from the table is provided as a minimum value. It is not suggested to use a calculated value that falls below this minimum.

EXAMPLE #2 –
Calculating RIC Reduction Using a Spherical Roller Bearing with Cylindrical Bore

Observations:

- Bearing 22230EM, nominal 150 mm (5.0955 in.) bore and 270 mm (10.6299 in.) O.D., standard class, operating at 1200 RPM.
- Float bearing position so the stationary O.D. should be free to move in SAF housing, with the stabilizing ring removed.
- With shaft/inner ring rotation and the moderate loading 0.09C, the bore should be tight fit.

We can use the nominal fit charts on page D-15 (shaft fit) to help guide our ISO fit selection.

Shaft Fit at 150 mm Bore: ISO p6

From the shaft fit chart at 150 mm nominal bore at p6 (page D-20), the shaft tolerance is nominal +0.043 to +0.068 mm (+0.0017 to +0.0027 in.). Therefore we have the following bore range:

max. shaft = 150.068 mm (5.0955 in.)

min. shaft = 150.043 mm (5.0945 in.)

This yields a shaft fit:

max. fit = max. shaft - min. bore
= 150.068 - 149.075
= 0.093 mm (0.0037 in.) tight

min. fit = min. shaft - max. bore
= 150.043 - 150.000
= 0.043 mm (0.0017 in.) tight

For the primary selection of RIC, the major parameters are the bearing speed and the fits. For our example, we know that the shaft fit is 0.043 mm (0.0017 in.) tight to 0.093 mm (0.0037 in.) tight.

We know the housing fit is loose. We also know that the bearing speed is 1200 RPM or 60 percent of the speed rating.

As a general rule of thumb, we increase the clearance for operating speeds that exceed 70 percent of the speed rating, due to concerns over internal heat generation and thermal growth. In this case, we are at 60 percent of the speed rating, so normal clearance, ISO CO or the SAF standard C3, can be selected.

Observing the RIC chart on page D-9, we find for 150 mm nominal bore at CO, the RIC will be 0.110 mm to 0.170 mm (0.0043 in. to 0.0067 in.). We also note that the minimum recommended RIC (installed) is 0.056 mm (0.0022 in.).

Also from page D-9, we note that we get an approximate reduction of RIC that is 80 percent of interference fit on a solid housing. Since we have a loose housing fit, there will be no RIC reduction from that fit.

Shaft fit RIC reductions and clearance:

For a 150 mm nominal bore at C3, the RIC will be 0.115 to 0.165 mm (0.0045 to 0.0065 in.). Recalculating shaft fit RIC reduction and clearance:

max. clearance = max. RIC - min. fit reduction
= 0.165 - 0.034 = 0.131 mm (0.0052 in.)

min. clearance = min. RIC - max. fit reduction
= 0.115 - 0.074 = 0.041 mm (0.0016 in.)

Since the minimum mounted clearance is less than the minimum suggested RIC of 0.056 mm (0.0022 in.), the C3 RIC clearance limit needs to be reevaluated.

INSTALLATION

When using a tight fit inner ring, the method of assembly will depend on whether the bearing has a cylindrical or tapered bore.

CLEANLINESS

- Choose a clean environment, free from dust and moisture.
- The installer should make every effort to ensure cleanliness by use of protective screens and clean cloths.

PLAN THE WORK

- Know your plans in advance and have the necessary tools at hand. This reduces the amount of time for the job and decreases the chance for dirt to get into the bearing.

INSPECTION AND PREPARATION

- All component parts of the machine should be on hand and thoroughly cleaned before proceeding.
- Housings should be cleaned, including blowing out the oil holes.
- Do not use air hose on bearings.
- If blind holes are used, insert a magnetic rod to remove metal chips that might be lodged there during fabrication.
- Shaft shoulders and spacer rings contacting the bearing should be square with the shaft axis.
- The shaft fillet must be small enough to clear the radius of the bearing.
- On original installations, all component parts should be checked against the detail specification prints for dimensional accuracy. Shaft and housing should be carefully checked for size and form (roundness, etc.).

⚠ WARNING

Failure to observe the following warnings could create a risk of death or serious injury.

Proper maintenance and handling practices are critical. Always follow installation instructions and maintain proper lubrication.

⚠ CAUTION

Failure to follow these cautions could create a risk of injury.

Remove oil or rust inhibitor from parts before heating, to avoid fire and fumes.

SHAFT AND HOUSING FINISH

- Shaft surfaces on which the bearing will be mounted must be clean and free from nicks and burrs.
- For applications with stationary housing and rotating shaft, it is suggested that the bearing seat on the shaft be ground to 1.6 µm (65 µin.) Ra maximum.
- If it is impractical to use a ground finish, a machined finish of 3.2 µm (125 µin.) Ra is acceptable in many cases, but the amount of interference fit should be slightly increased.

INSTALLING CYLINDRICAL BORE BEARINGS

Heat expansion method

- Most applications require a tight interference fit on the shaft.
- Mounting is simplified by heating the bearing to expand it sufficiently to slide easily onto the shaft.
- Two methods of heating are commonly used:

1. Tank of heated oil.
   - Accomplished by heating the bearing in a tank of oil that has a high flash point (see fig. D-5).
   - The oil temperature should not be allowed to exceed 121° C (250° F). A temperature of 93° C (200° F) is sufficient for most applications.
   - The bearing should be heated for 20 or 30 minutes, or until it is expanded sufficiently to slide onto the shaft easily.
   - The oil bath is shown in fig. D-5. The bearing should not be in direct contact with the heat source.
   - The usual arrangement is to have a screen several inches from the bottom of the tank. Small support blocks separate the bearing from the screen.
   - It is important to keep the bearing away from any localized high-heat source that may raise its temperature excessively, resulting in ring hardness reduction.
   - Flame-type burners are commonly used. An automatic device for temperature control is desirable.
   - If safety regulations prevent the use of an open heated oil bath, a mixture of 15 percent soluble-oil water may be used. This mixture may be heated to a maximum of 93° C (200° F) without being flammable.

2. Induction heating.
   - The induction heating process can be used for mounting bearings.
   - Induction heating is rapid. Care must be taken to prevent bearing temperature from exceeding 93° C (200° F).
   - Trial runs with the unit and bearing are usually necessary to obtain proper timing.
- Thermal crayons melted at predetermined temperatures or thermal gun can be used to check the bearing temperature.
- While the bearing is hot, it should be positioned squarely against the shoulder.
- Lockwashers and locknuts or clamping plates are then installed to hold the bearing against the shoulder of the shaft.
- As the bearing cools, the locknut or clamping plate should be tightened.
- For more information see the Timken Spherical Roller Bearing Catalog (order no. 10446), found on www.timken.com.

NOTE

Never use steam or hot water when cleaning the bearings because these methods can create rust or corrosion.

Never expose any surface of a bearing to the flame of a torch.

Do not heat bearing beyond 149° C (300° F).

Arbor press method

- An alternate method of mounting, generally used only on smaller size bearings, is to press the bearing onto the shaft or into the housing. This can be done by using an arbor press and a mounting tube as shown in fig. D-6.
- The tube should be made from soft steel with an inside diameter slightly larger than the shaft.
- The O.D. of the tube should not exceed the shaft backing diameter given in the Timken Spherical Roller Bearing Catalog (order no. 10446), found on www.timken.com.
- The tube should be faced square at both ends. It should be thoroughly clean inside and out, and long enough to clear the end of the shaft after the bearing is mounted.
- If the outer ring is being pressed into the housing, the O.D. of the mounting tube should be slightly smaller than the housing bore. The I.D. should not be less than the suggested housing backing diameter in the table of dimensions available in the Timken Spherical Roller Bearing Catalog (order no. 10446), found on www.timken.com.
- Coat the shaft with a light machine oil to reduce the force needed for a press fit.
- Carefully place the bearing on the shaft, making sure it is square with the shaft axis.
- Apply steady pressure from the arbor ram to drive the bearing firmly against the shoulder.

NOTE

Never attempt a press fit on a shaft by applying pressure to the outer ring or a press fit in a housing by applying pressure to the inner ring.

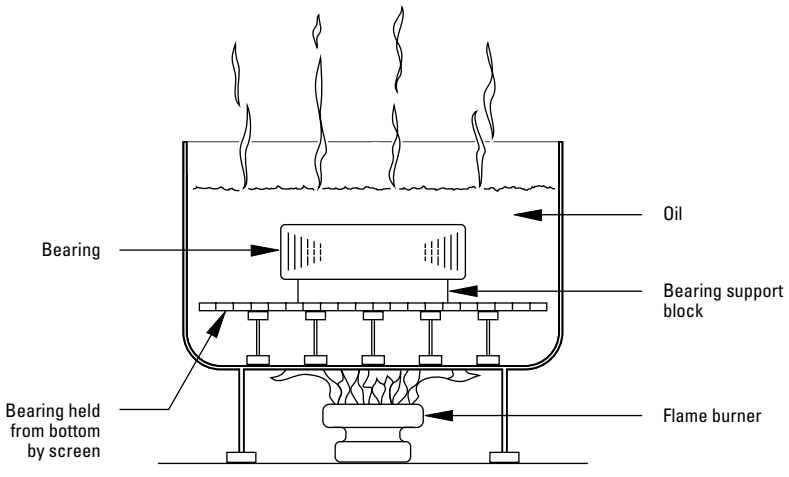

Fig. D-5. Heat expansion method.

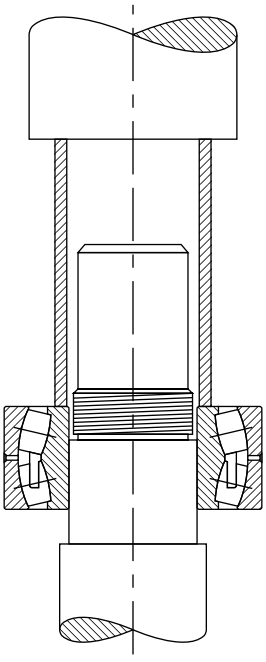

Fig. D-6. Arbor press method.

Mounting tapered bore spherical roller bearings

- Use a feeler gage with the thinnest blade of 0.038 mm (0.0015 in.).
- Place the bearing in an upright position with the inner and outer ring faces parallel.
- Place thumbs on the inner ring bore and oscillate the inner ring the distance of two or three roller spacings.
- Position the individual roller assemblies so that a roller is at the top of the inner ring on both sides of the bearing.
- With the roller in the correct position, insert a thin blade of the feeler gage between the roller and the outer ring, as shown in fig. D-7.
- Move the feeler gage carefully along the top roller between the roller and outer ring raceway. Repeat this procedure using thicker feeler gage blades until one is found that will not go through.
- The blade thickness that preceded the no-go blade is a measure of RIC before installation.
- Start the mounting procedure by lubricating the tapered shaft with a light coat of machine oil.
- Slide the bearing onto the shaft as far as it will go by hand.
- As the locknut is tightened, the interference fit builds up, resulting in expansion of the inner ring.
- Periodically measure to keep track of the reduction in RIC.
- Continue the procedure until the proper amount of reduction is obtained. Do not exceed suggested amount of reduction.
- As a final check, make sure the remaining RIC equals or exceeds the minimum mounted clearance shown in table D-5 on page D-10.
- During mounting, the RIC should be checked at the unloaded roller. If this is at the bottom, make sure that the roller is raised to seat firmly at the inboard position of the inner ring.
- When the suggested amount of RIC reduction has been accomplished, the bearing is properly fitted.
- Complete the procedure by peening the lockwasher tang into the locknut slot or securing the lockplate.



Fig. D-7. Measure RIC before installation.

SHAFT FITS FOR CYLINDRICAL BORE BEARINGS

This chart is a guideline for specifying shaft fits related to particular operating conditions. Please contact your Timken engineer for more information.

TABLE D-6. RADIAL SPHERICAL ROLLER BEARING SHAFT FITS

	Conditions	Examples	Shaft Dia.		Tolerance Symbol[1]	Remarks
			mm in.			
Stationary inner ring load	The inner ring not to be easily displaced on the shaft	Wheel on non-rotating shaft	All diameters		g6	
		Tension pulleys and rope sheaves			h6	
Rotating inner ring load or indeterminate load direction	Light and variable loads P ≤ 0.07C	Electrical apparatus, machine tools, pumps, ventilators, industrial trucks	over	incl.	k6	In very accurate applications, k5 and m5 are used instead of k6 and m6 respectively.
			18 0.7087	**100** 3.9370		
			100 3.9370	**200** 7.8740	m6	
	Normal and heavy loads P > 0.07C ≤ 0.25C	Applications in general, electrical motors, turbines, pumps, combustion engines, gear transmissions, woodworking machines	**18** 0.7087	**65** 2.5590	m5	
			65 2.5590	**100** 3.9370	m6	
			100 3.9370	**140** 5.5118	n6	
			140 5.5118	**280** 11.0236	p6	
			280 11.0236	**500** 19.6850	r6	
			500 19.6850	**and up**	r7	
	Very heavy loads and shock loads P > 0.25C	Journal boxes for locomotives and other heavy rail vehicles, traction motors	**18** 0.7087	**65** 2.5590	m6	Bearings with greater clearance than normal must be used.
			65 2.5590	**100** 3.9370	n6	
			100 3.9370	**140** 5.5118	p6	
			140 5.5118	**200** 7.8740	r6	
			200 7.8740	**500** 19.6850	r7	
BEARINGS WITH TAPERED BORE AND ADAPTER SLEEVE						
	All loads	Applications in general	All diameters			See tables for Reduction of RIC on pages D-9 and D-10.

[1]For solid steel shaft. See tables on pages D-16 through D-21 for tolerance value.
NOTE: Tolerance and shaft diameters are shown in the table as variances from nominal bearing bore.

These charts are guidelines for specifying shaft and housing fits related to particular operating conditions in table D-6 on page D-15.

FITTING PRACTICE TABLES

TABLE D-7. SPHERICAL ROLLER BEARINGS - SHAFT TOLERANCES (CLASSES g6, h5, h6, j5, j6, k5, k6, m5)

Bearing Bore			g6			h6			h5			j5		
Nominal (Max.)		Tolerance[1]	Shaft Dia.		Fit	Shaft Dia.		Fit	Shaft Dia.		Fit	Shaft Dia.		Fit
Over	Incl.		Max.	Min.		Max.	Min.		Max.	Min.		Max.	Min.	
mm in.	**mm** in.	**mm** in.	**mm** in.	**mm** in.	**mm** in.	**mm** in.	**mm** in.	**mm** in.	**mm** in.	**mm** in.	**mm** in.	**mm** in.	**mm** in.	**mm** in.
					0.025L			**0.016L**						**0.005L**
30.000	**50.000**	**-0.014**	**-0.009**	**-0.025**	**0.003T**	**0.000**	**-0.016**	**0.012T**	–	–	–	**+0.006**	**-0.005**	**0.018T**
1.1811	1.9685	-0.0006	-0.0004	-0.0010	0.0010L	0.0000	-0.0006	0.0006L				+0.0002	-0.0002	0.0002L
					0.0001T			0.0005T						0.0007T
					0.029L			**0.019L**						**0.007L**
50.000	**80.000**	**-0.015**	**-0.010**	**-0.029**	**0.005T**	**0.000**	**-0.019**	**0.015T**	–	–	–	**+0.006**	**-0.007**	**0.021T**
1.9685	3.1496	-0.0006	-0.0004	-0.0011	0.0011L	0.0000	-0.0007	0.0007L				+0.0002	-0.0003	0.0003L
					0.0002T			0.0006T						0.0008T
					0.034L			**0.022L**						**0.009L**
80.000	**120.000**	**-0.020**	**-0.012**	**-0.034**	**0.008T**	**0.000**	**-0.022**	**0.020T**	–	–	–	**+0.006**	**-0.009**	**0.026T**
3.1496	4.7244	-0.0008	-0.0005	-0.0013	0.0013L	0.0000	-0.0009	0.0009L				+0.0002	-0.0004	0.0004L
					0.0003T			0.0008T						0.0010T
					0.039L			**0.025L**						**0.011L**
120.000	**180.000**	**-0.025**	**-0.014**	**-0.039**	**0.011T**	**0.000**	**-0.025**	**0.025T**	–	–	–	**+0.007**	**-0.011**	**0.032T**
4.7244	7.0866	-0.0010	-0.0006	-0.0015	0.0015L	0.0000	-0.0010	0.0010L				+0.0003	-0.0004	0.0004L
					0.0004T			0.0010T						0.0013T
					0.044T			**0.029L**						**0.013L**
180.000	**200.000**	**-0.030**	**-0.015**	**-0.044**	**0.015T**	**0.000**	**-0.029**	**0.030T**	–	–	–	**+0.007**	**-0.013**	**0.037T**
7.0866	7.8740	-0.0012	-0.0006	-0.0017	0.0017L	0.0000	-0.0011	0.0011L				+0.0003	-0.0005	0.0005L
					0.0006T			0.0012T						0.0015T
					0.044T			**0.029L**						**0.013L**
200.000	**225.000**	**-0.030**	**-0.015**	**-0.044**	**0.015T**	**0.000**	**-0.029**	**0.030T**	–	–	–	**+0.007**	**-0.013**	**0.037T**
7.8740	8.8583	-0.0012	-0.0006	-0.0017	0.0017L	0.0000	-0.0011	0.0011L				+0.0003	-0.0005	0.0005L
					0.0006T			0.0012T						0.0015T
					0.044T			**0.029L**						**0.013L**
225.000	**250.000**	**-0.030**	**-0.015**	**-0.044**	**0.015T**	**0.000**	**-0.029**	**0.030T**	–	–	–	**+0.007**	**-0.013**	**0.037T**
8.8583	9.8425	-0.0012	-0.0006	-0.0017	0.0017L	0.0000	-0.0011	0.0011L				+0.0003	-0.0005	0.0005L
					0.0006T			0.0012T						0.0015T
					0.049L			**0.032L**						**0.016L**
250.000	**280.000**	**-0.035**	**-0.017**	**-0.049**	**0.018T**	**0.000**	**-0.032**	**0.035T**	–	–	–	**+0.007**	**-0.016**	**0.042T**
9.8425	11.0236	-0.0014	-0.0007	-0.0019	0.0019L	0.0000	-0.0013	0.0013L				+0.0003	-0.0006	0.0006L
					0.0007T			0.0014T						0.0017T
					0.049L			**0.032L**						**0.016L**
280.000	**315.000**	**-0.035**	**-0.017**	**-0.049**	**0.018T**	**0.000**	**-0.032**	**0.035T**	–	–	–	**+0.007**	**-0.016**	**0.042T**
11.0236	12.4016	-0.0014	-0.0007	-0.0019	0.0019L	0.0000	-0.0013	0.0013L				+0.0003	-0.0006	0.0006L
					0.0007T			0.0014T						0.0017T
					0.054L			**0.036L**						**0.018L**
315.000	**355.000**	**-0.040**	**-0.018**	**-0.054**	**0.022T**	**0.000**	**-0.036**	**0.040T**	–	–	–	**+0.007**	**-0.018**	**0.047T**
12.4016	13.9764	-0.0016	-0.0007	-0.0021	0.0021L	0.0000	-0.0014	0.0014L				+0.0003	-0.0007	0.0007L
					0.0009T			0.0016T						0.0019T

[1]Tolerance range is from +0 to value listed.
NOTE: Tolerance and shaft diameters are shown in the table as variances from nominal bearing bore.

These charts are guidelines for specifying shaft and housing fits related to particular operating conditions in table D-6 on page D-15.

j6			k5			k6			m5		
Shaft Dia.		Fit	Shaft Dia.		Fit	Shaft Dia.		Fit	Shaft Dia.		Fit
Max.	Min.		Max.	Min.		Max.	Min.		Max.	Min.	
mm in.	**mm** in.	**mm** in.	**mm** in.	**mm** in.	**mm** in.	**mm** in.	**mm** in.	**mm** in.	**mm** in.	**mm** in.	**mm** in.
		0.005L			**0.002T**			**0.002T**			**0.009T**
+0.011	**-0.005**	**0.023T**	**+0.013**	**+0.002**	**0.025T**	**+0.018**	**+0.002**	**0.030T**	**+0.020**	**+0.009**	**0.032T**
+0.0004	-0.0002	0.0002L	+0.0005	+0.0001	0.0001T	+0.0007	+0.0001	0.0001T	+0.0008	+0.0004	0.0004T
		0.00085T			0.0010T			0.0012T			0.00125T
		0.007L			**0.002T**			**0.002T**			**0.011T**
+0.012	**-0.007**	**0.027T**	**+0.015**	**+0.002**	**0.030T**	**+0.021**	**+0.002**	**0.036T**	**+0.024**	**+0.011**	**0.039T**
+0.0005	-0.0003	0.0003L	+0.0006	+0.0001	0.0001T	+0.0008	+0.0001	0.0001T	+0.0009	+0.0004	0.0004T
		0.0011T			0.0012T			0.0014T			0.0015T
		0.009L			**0.003T**			**0.003T**			**0.013T**
+0.013	**-0.009**	**0.033T**	**+0.018**	**+0.003**	**0.038T**	**+0.025**	**+0.003**	**0.045T**	**+0.028**	**+0.013**	**0.048T**
+0.0005	-0.0004	0.0004L	+0.0007	+0.0001	0.0001T	+0.0010	+0.0001	0.0001T	+0.0011	+0.0005	0.0005T
		0.0013T			0.0015T			0.0018T			0.0019T
		0.011L			**0.003T**			**0.003T**			**0.015T**
+0.014	**-0.011**	**0.039T**	**+0.021**	**+0.003**	**0.046T**	**+0.028**	**+0.003**	**0.053T**	**+0.033**	**+0.015**	**0.058T**
+0.0006	-0.0004	0.0004L	+0.0008	+0.0001	0.0001T	+0.0011	+0.0001	0.0001T	+0.0013	+0.0006	0.0006T
		0.0016T			0.0018T			0.0021T			0.0023T
		0.013L			**0.004T**						**0.017T**
+0.016	**-0.013**	**0.046T**	**+0.024**	**+0.004**	**0.054T**	–	–	–	**+0.037**	**+0.017**	**0.067T**
+0.0006	-0.0005	0.0005L	+0.0009	+0.0002	0.0002T				+0.0015	+0.0007	0.0007T
		0.0018T			0.0021T						0.0027T
		0.013L			**0.004T**						**0.017T**
+0.016	**-0.013**	**0.046T**	**+0.024**	**+0.004**	**0.054T**	–	–	–	**+0.037**	**+0.017**	**0.067T**
+0.0006	-0.0005	0.0005L	+0.0009	+0.0002	0.0002T				+0.0015	+0.0007	0.0007T
		0.0018T			0.0021T						0.0027T
		0.013L			**0.004T**						**0.017T**
+0.016	**-0.013**	**0.046T**	**+0.024**	**+0.004**	**0.054T**	–	–	–	**+0.037**	**+0.017**	**0.067T**
+0.0006	-0.0005	0.0005L	+0.0009	+0.0002	0.0002T				+0.0015	+0.0007	0.0007T
		0.0018T			0.0021T						0.0027T
		0.016L			**0.004T**						**0.020T**
+0.016	**-0.016**	**0.051T**	**+0.027**	**+0.004**	**0.062T**	–	–	–	**+0.043**	**+0.020**	**0.078T**
+0.0006	-0.0006	0.0006L	+0.0011	+0.0002	0.0002T				+0.0017	+0.0008	0.0008T
		0.0020T			0.0025T						0.0031T
		0.016L			**0.004T**						**0.020T**
+0.016	**-0.016**	**0.051T**	**+0.027**	**+0.004**	**0.062T**	–	–	–	**+0.043**	**+0.020**	**0.078T**
+0.0006	-0.0006	0.0006L	+0.0011	+0.0002	0.0002T				+0.0017	+0.0008	0.0008T
		0.0020T			0.0025T						0.0031T
		0.018L			**0.004T**						**0.021T**
+0.018	**-0.018**	**0.058T**	**+0.029**	**+0.046**	**0.069T**	–	–	–	**+0.046**	**+0.021**	**0.086T**
+0.0007	-0.0007	0.0007L	+0.0011	+0.0002	0.0002T				+0.0018	+0.0008	0.0008T
		0.0023T			0.0027T						0.0034T

(1)Tolerance range is from +0 to value listed.
NOTE: Tolerance and shaft diameters are shown in the table as variances from nominal bearing bore.

Continued on next page.

These charts are guidelines for specifying shaft and housing fits related to particular operating conditions in table D-6 on page D-15.

TABLE D-7. SPHERICAL ROLLER BEARINGS - SHAFT TOLERANCES (CLASSES g6, h5, h6, j5, j6, k5, k6, m5) *– continued*

Bearing Bore			g6			h6			h5			j5		
Nominal (Max.)		Tolerance[1]	Shaft Dia.		Fit	Shaft Dia.		Fit	Shaft Dia.		Fit	Shaft Dia.		Fit
Over	Incl.		Max.	Min.		Max.	Min.		Max.	Min.		Max.	Min.	
mm in.	**mm** in.	**mm** in.	**mm** in.	**mm** in.	**mm** in.	**mm** in.	**mm** in.	**mm** in.	**mm** in.	**mm** in.	**mm** in.	**mm** in.	**mm** in.	**mm** in.
					0.054L			**0.036L**						**0.018L**
355.000	**400.000**	**-0.040**	**-0.018**	**-0.054**	**0.022T**	**0.000**	**-0.036**	**0.040T**	–	–	–	**+0.007**	**-0.018**	**0.047T**
13.9764	15.7480	-0.0016	-0.0007	-0.0021	0.0021L	0.0000	-0.0014	0.0014L				+0.0003	-0.0007	0.0007L
					0.0009T			0.0016T						0.0019T
					0.060L			**0.040L**						**0.020L**
400.000	**450.000**	**-0.045**	**-0.020**	**-0.060**	**0.025T**	**0.000**	**-0.040**	**0.045T**	–	–	–	**+0.007**	**-0.020**	**0.052T**
15.7480	17.7165	-0.0018	-0.0008	-0.0024	0.0024L	0.0000	-0.0016	0.0016L				+0.0003	-0.0008	0.0008L
					0.0010T			0.0018T						0.0021T
					0.060L			**0.040L**						**0.020L**
450.000	**500.000**	**-0.045**	**-0.020**	**-0.060**	**0.025T**	**0.000**	**-0.040**	**0.045T**	–	–	–	**+0.007**	**-0.020**	**0.052T**
17.7165	19.6850	-0.0018	-0.0008	-0.0024	0.0024L	0.0000	-0.0016	0.0016L				+0.0003	-0.0008	0.0008L
					0.0010T			0.0018T						0.0020T

[1]Tolerance range is from +0 to value listed.
NOTE: Tolerance and shaft diameters are shown in the table as variances from nominal bearing bore.

These charts are guidelines for specifying shaft and housing fits related to particular operating conditions in table D-6 on page D-15.

j6			k5			k6			m5		
Shaft Dia.		Fit	Shaft Dia.		Fit	Shaft Dia.		Fit	Shaft Dia.		Fit
Max.	Min.		Max.	Min.		Max.	Min.		Max.	Min.	
mm in.	**mm** in.	**mm** in.	**mm** in.	**mm** in.	**mm** in.	**mm** in.	**mm** in.	**mm** in.	**mm** in.	**mm** in.	**mm** in.
		0.018L			**0.004T**						**0.021T**
+0.018	**-0.018**	**0.058T**	**+0.029**	**+0.004**	**0.069T**	–	–	–	**+0.046**	**+0.021**	**0.086T**
+0.0007	-0.0007	0.0007L	+0.0011	+0.0002	0.0002T				+0.0018	+0.0008	0.0008T
		0.0023T			0.0027T						0.0034T
		0.020L			**0.005T**						**0.023T**
+0.020	**-0.020**	**0.065T**	**+0.032**	**+0.005**	**0.077T**	–	–	–	**+0.050**	**+0.023**	**0.095T**
+0.0008	-0.0008	0.0008L	+0.0013	+0.0002	0.0002T				+0.0020	+0.0009	0.0009T
		0.0026T			0.0031T						0.0037T
		0.020L			**0.005T**						**0.023T**
+0.020	**-0.020**	**0.065T**	**+0.032**	**+0.005**	**0.077T**	–	–	–	**+0.050**	**+0.023**	**0.095T**
+0.0008	-0.0008	0.0008L	+0.0013	+0.0002	0.0002T				+0.0020	+0.0009	0.0009T
		0.0026T			0.0031T						0.0037T

(1)Tolerance range is from +0 to value listed.
NOTE: Tolerance and shaft diameters are shown in the table as variances from nominal bearing bore.

These charts are guidelines for specifying shaft and housing fits related to particular operating conditions in table D-6 on page D-15.

TABLE D-8. SPHERICAL ROLLER BEARINGS - SHAFT TOLERANCES (CLASSES m6, n6, p6, r6, r7)

Bearing Bore			m6			n6			p6			r6			r7		
Nominal (Max.)		Tolerance[1]	Shaft Dia.		Fit	Shaft Dia.		Fit	Shaft Dia.		Fit	Shaft Dia.		Fit	Shaft Dia.		Fit
Over	Incl.		Max.	Min.		Max.	Min.		Max.	Min.		Max.	Min.		Max.	Min.	
mm in.	**mm** in.	**mm** in.	**mm** in.	**mm** in.	**mm** in.	**mm** in.	**mm** in.	**mm** in.	**mm** in.	**mm** in.	**mm** in.	**mm** in.	**mm** in.	**mm** in.	**mm** in.	**mm** in.	**mm** in.
					0.009T												
30.000	**50.000**	**-0.014**	**+0.025**	**+0.009**	**0.037T**	–	–	–	–	–	–	–	–	–	–	–	–
1.1811	1.9685	-0.0006	+0.0010	+0.0004	0.0004T												
					0.0145T												
					0.011T			**0.020T**									
50.000	**80.000**	**-0.015**	**+0.030**	**+0.011**	**0.045T**	**+0.039**	**+0.020**	**0.054T**	–	–	–	–	–	–	–	–	–
1.9685	3.1496	-0.0006	+0.0012	+0.0004	0.0004T	+0.0015	+0.0008	0.0008T									
					0.0018T			0.0021T									
					0.013T			**0.023T**			**0.037T**						
80.000	**120.000**	**-0.020**	**+0.035**	**+0.013**	**0.055T**	**+0.045**	**+0.023**	**0.065T**	**+0.059**	**+0.037**	**0.079T**	–	–	–	–	–	–
3.1496	4.7244	-0.0008	+0.0014	+0.0005	0.0005T	+0.0018	+0.0009	0.0009T	+0.0023	+0.0015	0.0015T						
					0.0022T			0.0026T			0.0031T						
					0.015T			**0.027T**			**0.043T**			**0.065T**			
120.000	**180.000**	**-0.025**	**+0.040**	**+0.015**	**0.065T**	**+0.052**	**+0.027**	**0.077T**	**+0.068**	**+0.043**	**0.093T**	**+0.090**	**+0.065**	**0.115T**	–	–	–
4.7244	7.0866	-0.0010	+0.0016	+0.0006	0.0006T	+0.0020	+0.0011	0.0011T	+0.0027	+0.0017	0.0017T	+0.0035	+0.0026	0.0026T			
					0.0026T			0.0030T			0.0037T			0.0045T			
					0.017T			**0.031L**			**0.050T**			**0.077T**			
180.000	**200.000**	**-0.030**	**+0.046**	**+0.017**	**0.076T**	**+0.060**	**+0.031**	**0.090T**	**+0.079**	**+0.050**	**0.109T**	**+0.106**	**+0.077**	**0.136T**	–	–	–
7.0866	7.8740	-0.0012	+0.0018	+0.0007	0.0007T	+0.0024	+0.0012	0.0012L	+0.0031	+0.0020	0.0020T	+0.0042	+0.0030	0.0030T			
					0.0030T			0.0036T			0.0043T			0.0054T			
					0.017T			**0.031L**			**0.050T**			**0.080T**			**0.080T**
200.000	**225.000**	**-0.030**	**+0.046**	**+0.017**	**0.076T**	**+0.060**	**+0.031**	**0.090T**	**+0.079**	**+0.050**	**0.109T**	**+0.109**	**+0.080**	**0.139T**	**+0.126**	**+0.080**	**0.156T**
7.8740	8.8583	-0.0012	+0.0018	+0.0007	0.0007T	+0.0024	+0.0012	0.0012L	+0.0031	+0.0020	0.0020T	+0.0043	+0.0031	0.0031T	+0.0050	+0.0031	0.0031T
					0.0030T			0.0036T			0.0043T			0.0055T			0.0062T
					0.017T			**0.031L**			**0.050T**			**0.084T**			**0.084T**
225.000	**250.000**	**-0.030**	**+0.046**	**+0.017**	**0.076T**	**+0.060**	**+0.031**	**0.090T**	**+0.079**	**+0.050**	**0.109T**	**+0.113**	**+0.084**	**0.143T**	**+0.130**	**+0.084**	**0.160T**
8.8583	9.8425	-0.0012	+0.0018	+0.0007	0.0007T	+0.0024	+0.0012	0.0012L	+0.0031	+0.0020	0.0020T	+0.0044	+0.0033	0.0033T	+0.0051	+0.0033	0.0033T
					0.0030T			0.0036T			0.0043T			0.0056T			0.0063T
					0.020T			**0.034T**			**0.056T**			**0.094T**			**0.094T**
250.000	**280.000**	**-0.035**	**+0.052**	**+0.020**	**0.087T**	**+0.066**	**+0.034**	**0.101T**	**+0.088**	**+0.056**	**0.123T**	**+0.126**	**+0.094**	**0.161T**	**+0.146**	**+0.094**	**0.181T**
9.8425	11.0236	-0.0014	+0.0020	+0.0008	0.0008T	+0.0026	+0.0013	0.0013T	+0.0035	+0.0022	0.0022T	+0.0050	+0.0037	0.0037T	+0.0057	+0.0037	0.0037T
					0.0034T			0.0040T			0.0049T			0.0064T			0.0071T
					0.020T			**0.034T**			**0.056T**			**0.098T**			**0.098T**
280.000	**315.000**	**-0.035**	**+0.052**	**+0.020**	**0.087T**	**+0.066**	**+0.034**	**0.101T**	**+0.088**	**+0.056**	**0.123T**	**+0.130**	**+0.098**	**0.165T**	**+0.150**	**+0.098**	**0.185T**
11.0236	12.4016	-0.0014	+0.0020	+0.0008	0.0008T	+0.0026	+0.0013	0.0013T	+0.0035	+0.0022	0.0022T	+0.0051	+0.0039	0.0039T	+0.0059	+0.0039	0.0039T
					0.0034T			0.0040T			0.0049T			0.0065T			0.0073T
					0.021T			**0.037T**			**0.062T**			**0.108T**			**0.108T**
315.000	**355.000**	**-0.040**	**+0.057**	**+0.021**	**0.097T**	**+0.073**	**+0.037**	**0.113T**	**+0.098**	**+0.062**	**0.138T**	**+0.144**	**+0.108**	**0.184T**	**+0.165**	**+0.108**	**0.205T**
12.4016	13.9764	-0.0016	+0.0022	+0.0008	0.0008T	+0.0029	+0.0015	0.0015T	+0.0039	+0.0024	0.0024T	+0.0057	+0.0043	0.0043T	+0.0065	+0.0043	0.0043T
					0.0038T			0.0045T			0.0055T			0.0073T			0.0081T

[1]Tolerance range is from +0 to value listed.

NOTE: Tolerance and shaft diameters are shown in the table as variances from nominal bearing bore.

Continued on next page.

These charts are guidelines for specifying shaft and housing fits related to particular operating conditions in table D-6 on page D-15.

Continued from previous page.

Bearing Bore			m6			n6			p6			r6			r7		
Nominal (Max.)		Tolerance[1]	Shaft Dia.		Fit	Shaft Dia.		Fit	Shaft Dia.		Fit	Shaft Dia.		Fit	Shaft Dia.		Fit
Over	Incl.		Max.	Min.		Max.	Min.		Max.	Min.		Max.	Min.		Max.	Min.	
mm in.	**mm** in.	**mm** in.	**mm** in.	**mm** in.	**mm** in.	**mm** in.	**mm** in.	**mm** in.	**mm** in.	**mm** in.	**mm** in.	**mm** in.	**mm** in.	**mm** in.	**mm** in.	**mm** in.	**mm** in.
								0.037T			**0.062T**			**0.114T**			**0.114T**
355.000	**400.000**	**-0.040**	–	–	–	**+0.073**	**+0.037**	**0.113T**	**+0.098**	**+0.062**	**0.138T**	**+0.150**	**+0.114**	**0.190T**	**+0.171**	**+0.114**	**0.211T**
13.9764	15.7480	-0.0016				+0.0029	+0.0015	0.0015T	+0.0039	+0.0024	0.0024T	+0.0059	+0.0045	0.0045T	+0.0067	+0.0045	0.0045T
								0.0045T			0.0055T			0.0075T			0.0083T
								0.040T			**0.068T**			**0.126T**			**0.126T**
400.000	**450.000**	**-0.045**	–	–	–	**+0.080**	**+0.040**	**0.125T**	**+0.108**	**+0.068**	**0.153T**	**+0.166**	**+0.126**	**0.211T**	**+0.189**	**+0.126**	**0.234T**
15.7480	17.7165	-0.0018				+0.0031	+0.0016	0.0016T	+0.0043	+0.0027	0.0027T	+0.0065	+0.0050	0.0050T	+0.0074	+0.0050	0.0050T
								0.0049T			0.0061T			0.0083T			0.0092T
								0.040T			**0.068T**			**0.132T**			**0.132T**
450.000	**500.000**	**-0.045**	–	–	–	**+0.080**	**+0.040**	**0.125T**	**+0.108**	**+0.068**	**0.153T**	**+0.172**	**+0.132**	**0.217T**	**+0.195**	**+0.132**	**0.240T**
17.7165	19.6850	-0.0018				+0.0031	+0.0016	0.0016T	+0.0043	+0.0027	0.0027T	+0.0068	+0.0052	0.0052T	+0.0077	+0.0052	0.0052T
								0.0049T			0.0061T			0.0086T			0.0095T

[1]Tolerance range is from +0 to value listed.

NOTE: Tolerance and shaft diameters are shown in the table as variances from nominal bearing bore.

SAF LUBRICATION

To help maintain a bearing's antifriction characteristics, lubrication is needed to:

- Minimize rolling resistance caused by deformation of the rolling elements and raceway under load by separating the mating surfaces.
- Minimize sliding friction occurring between rolling elements, raceways and cage.
- Transfer heat (with oil lubrication).
- Protect from corrosion and, with grease lubrication, from contaminant ingress.

SAF Lubrication D-24
Grease Lubrications for Bearing/Housing Assemblies D-32
General-Purpose Industrial Grease D-32



SAF LUBRICATION

The wide range of bearing types and operating conditions precludes any simple, all-inclusive statement or guideline allowing the selection of the proper lubricant. At the design level, the first consideration is whether oil or grease is best for the particular operation. The advantages of oil and grease are outlined in the table below. When heat must be carried away from the bearing, oil must be used. It is almost always preferred for very high-speed applications. Timken SAF housings are designed to allow lubrication via grease, oil bath, or oil circulation.

TABLE D-10. ADVANTAGES OF OIL AND GREASE

Oil	Grease
Carries heat away from the bearings	Simplifies seal design and acts as a sealant
Carries away moisture and particulate matter	Permits prelubrication of sealed or shielded bearings
Easily controlled lubrication	Generally requires less frequent lubrication

European REACH compliance

Timken-branded lubricants, greases and similar products sold in stand-alone containers or delivery systems are subject to the European REACH (**R**egistration, **E**valuation, **A**uthorization and Restriction of **CH**emicals) directive. For import into the European Union, Timken can sell and provide only those lubricants and greases that are registered with ECHA (**E**uropean **CH**emical **A**gency). For further information, please contact your Timken engineer.

OIL LUBRICATION

Oils used for bearing lubrication should be high-quality mineral oils or synthetic oils with similar properties. Selection of the proper type of oil depends on bearing speed, load, operating temperature and lubrication method. Some features and advantages of oil lubrication, in addition to the above are:

- Oil is a better lubricant for high speeds or high temperatures. It can be cooled to help reduce bearing temperature.
- It is easier to handle and control the amount of lubricant reaching the bearing. It is harder to retain in the bearing. Lubricant losses may be higher than with grease.
- Oil can be introduced to the bearing in many ways, such as drip-feed, wick-feed, pressurized circulating systems, oil bath or air-oil mist. Each is suited for certain types of applications.
- Oil is easier to keep clean for recirculating systems.

Oil may be introduced to the bearing housing in many ways. The most common systems are:

- **Oil bath.** The SAF housing is designed to provide a sump through which the rolling elements of the bearing will pass. Generally, the oil level should be no higher than the center point of the lowest rolling element. If speed is high, lower oil levels should be used to reduce churning. Gages or controlled elevation drains are used to achieve and maintain the proper oil level.
- **Circulating system.** This system has the advantages of:
  - An adequate supply of oil for both cooling and lubrication.
  - Metered control of the quantity of oil delivered to each bearing.
  - Removal of contaminants and moisture from the bearing by flushing action.
  - Suitability for multiple bearing installations.
  - Large reservoir, which reduces deterioration. Increased lubricant life provides economical efficiency.
  - Incorporation of oil-filtering devices.
  - Positive control to deliver the lubricant where needed.
  - A typical circulating oil system consists of an oil reservoir, pump, piping and filter. A heat exchange may be required.
- **Oil-mist lubrication.** Oil-mist lubrication systems are used in high-speed, continuous-operation applications. This system permits close control of the amount of lubricant reaching the bearings. The oil may be metered, atomized by compressed air and mixed with air, or it may be picked up from a reservoir using a venturi effect. In either case, the air is filtered and supplied under sufficient pressure to assure adequate lubrication of the bearings. Control of this type of lubrication system is accomplished by monitoring the operating temperatures of the bearings being lubricated. The continuous passage of the pressurized air and oil through the labyrinth seals used in the system prevents the entrance of contaminants from the atmosphere to the system.

  The successful operation of this type of system is based upon the following factors:
  - Proper location of the lubricant entry ports in relation to the bearings being lubricated.
  - Avoidance of excessive pressure drops across void spaces within the system.
  - Proper air pressure and oil quantity ratio to suit the particular application.
  - Adequate exhaust of the air-oil mist after lubrication has been accomplished.

  To ensure wetting of the bearings, and to prevent possible damage to the rolling elements and rings, it is imperative that the oil-mist system be turned on for several minutes before the equipment is started. The importance of wetting the bearing before starting cannot be overstated, and it also has particular significance for equipment that has been idled for extended periods of time.

Lubricating oils are commercially available in many forms for automotive, industrial, aircraft and other uses. Oils are classified as either petroleum types (refined from crude oil) or synthetic types (produced by chemical synthesis).

PETROLEUM OILS

Petroleum oils are made from a petroleum hydrocarbon derived from crude oil, with additives to improve certain properties. Petroleum oils are used for nearly all oil-lubricated applications of bearings.

SYNTHETIC OILS

Synthetic oils cover a broad range of categories and include polyalphaolefins, silicones, polyglycols and various esters. In general, synthetic oils are less prone to oxidation and can operate at extreme hot or cold temperatures. Physical properties, such as pressure-viscosity coefficients, tend to vary between oil types; use caution when making oil selections.

The polyalphaolefins (PAO) have a hydrocarbon chemistry that parallels petroleum oil both in chemical structures and pressure-viscosity coefficients. Therefore, PAO oil is mostly used in the oil-lubricated applications of bearings when severe temperature environments (hot and cold) are encountered or when extended lubricant life is required.

The silicone, ester and polyglycol oils have an oxygen-based chemistry that is structurally quite different from petroleum oils and PAO oils. This difference has a profound effect on its physical properties where pressure-viscosity coefficients can be lower compared to mineral and PAO oils. This means that these types of synthetic oils may actually generate a smaller elastohydrodynamic (EHD) film thickness than a mineral or PAO oil of equal viscosity at operating temperature. Reductions in bearing fatigue life and increases in bearing wear could result from this reduction of lubricant film thickness.

⚠ WARNING

Failure to observe the following warnings could create a risk of death or serious injury.

Proper maintenance and handling practices are critical. Always follow installation instructions and maintain proper lubrication.

VISCOSITY

The selection of oil viscosity for any bearing application requires consideration of several factors: load, speed, bearing setting, type of oil and environmental factors. Since oil viscosity varies inversely with temperature, a viscosity value must always be stated with the temperature at which it was determined. High-viscosity oil is used for low-speed or high-ambient-temperature applications. Low-viscosity oil is used for high-speed or low-ambient-temperature applications.

There are several classifications of oils based on viscosity grades. The most familiar are the Society of Automotive Engineers (SAE) classifications for automotive engine and gear oils. The American Society for Testing and Materials (ASTM) and the International Organization for Standardization (ISO) have adopted standard viscosity grades for industrial fluids. Fig. D-8 shows the viscosity comparisons of ISO/ASTM with SAE classification systems at 40° C (104° F).

VISCOSITY CLASSIFICATION COMPARISON

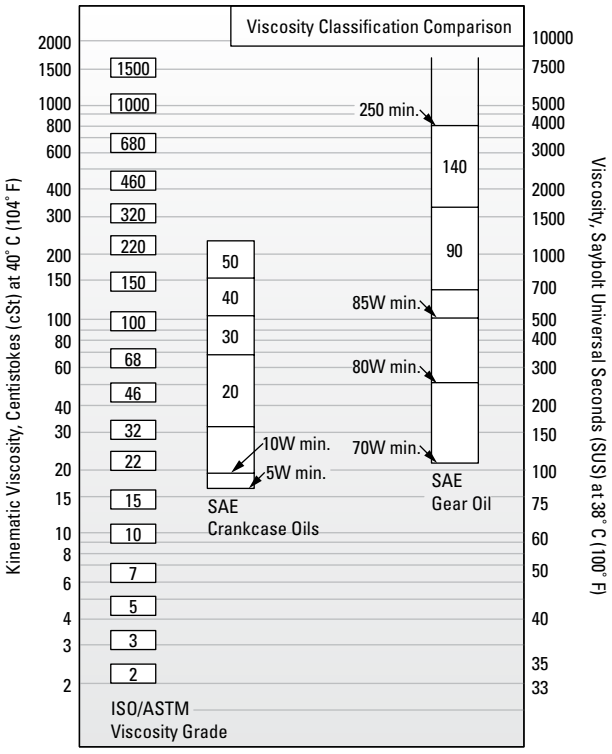

Fig. D-8. Comparison between ISO/ASTM grades (ISO 3448/ASTM D2442) and SAE grades (SAE J 300-80 for crankcase oils, SAE J 306-81 for axle and manual transmission oils).

The ASTM/ISO viscosity grade system for industrial oils is depicted in fig. D-9 below.

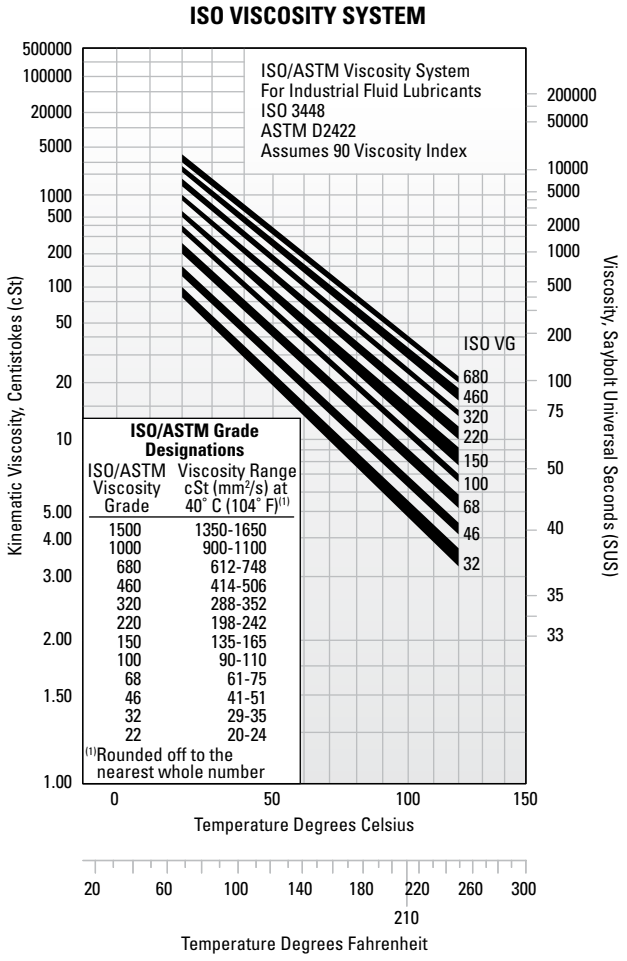

Fig. D-9. Viscosity grade system for industrial oils.

TYPICAL BEARING LUBRICATION OILS

In this section, the properties and characteristics of lubricants for typical roller bearing applications are listed. These general characteristics are derived from successful performance in applications across all industries.

General-purpose rust and oxidation inhibited oil

General-purpose rust and oxidation (R&O) inhibited oils are the most common type of industrial lubricant (see table D-11). They are used to lubricate Timken® bearings in all types of industrial applications where conditions requiring special considerations do not exist.

TABLE D-11. SUGGESTED GENERAL-PURPOSE R&O INHIBITED OIL PROPERTIES

Properties	
Base stock	Solvent-refined, high viscosity-index petroleum oil
Additives	Corrosion and oxidation inhibitors
Viscosity index	80 min.
Pour point	-10° C max. (14° F)
Viscosity grades	ISO/ASTM 32 through 220

Some low-speed and/or high-ambient-temperature applications require the higher viscosity grades. High-speed and/or low-temperature applications require the lower viscosity grades.

Industrial extreme-pressure (EP) gear oil

Extreme-pressure gear oils are used to lubricate Timken bearings in most types of heavily loaded industrial equipment (see table D-12). They should be capable of withstanding abnormal shock loads that are common in heavy-duty equipment.

TABLE D-12. SUGGESTED INDUSTRIAL EP GEAR OIL PROPERTIES

Properties	
Base stock	Solvent-refined, high viscosity-index petroleum oil
Additives	Corrosion and oxidation inhibitors Extreme-pressure (EP) additive(1) - 15.8 kg (35 lb.) min.
Viscosity index	80 min.
Pour point	-10° C max. (14° F)
Viscosity grades	ISO/ASTM 100, 150, 220, 320, 460

(1)ASTM D 2782

Industrial EP gear oils should be composed of a highly refined petroleum oil-based stock plus appropriate inhibitors and additives. They should not contain materials that are corrosive or abrasive to bearings. The inhibitors should provide long-term protection from oxidation and protect the bearing from corrosion in the presence of moisture. The oils should resist foaming in service and have good water-separation properties. An EP additive protects against scoring under boundary-lubrication conditions. The viscosity grades suggested represent a wide range. High-temperature and/or slow-speed applications generally require the higher viscosity grades. Low temperatures and/or high speeds require the use of lower viscosity grades.

GREASE LUBRICATION

Grease lubrication is generally applicable to low-to-moderate speed applications that have operating temperatures within the limits of the grease. There is no universal antifriction bearing grease. Each grease has limiting properties and characteristics.

Greases consist of a base oil, a thickening agent and additives. Conventionally, bearing greases have consisted of petroleum base oils thickened to the desired consistency by some form of metallic soap. More recently synthetic base oils have been used with organic and inorganic thickeners. Table D-13 summarizes the composition of typical lubricating greases.

TABLE D-13. COMPOSITION OF GREASES

Base Oil	+	Thickening Agents	+	Additives	=	Lubricating Grease
Mineral oil Synthetic hydrocarbon Esters Perfluorinated oil Silicone		Soaps and complex soaps lithium, aluminum, barium, calcium Non-Soap (inorganic) microgel (clay), carbon black, silica-gel, PTFE Non-Soap (organic) Urea compounds		Rust inhibitors Dyes Tactifiers Metal deactivates Oxidation inhibitors Anti-wear EP		

Calcium- and aluminum-based greases have excellent water resistance and are used in industrial applications where water ingress is an issue. Lithium-based greases are multi-purpose and are used in industrial applications and wheel bearings.

Synthetic base oils such as esters, organic esters and silicones used with conventional thickeners and additives typically have higher maximum operating temperatures than petroleum-based greases. Synthetic greases can be designed to operate in temperatures from -73° C (-100° F) to 288° C (550° F).

In table D-14 are the general characteristics of common thickeners used with petroleum base oils.

Use of the thickeners in table D-14 with synthetic hydrocarbon or ester base oils increases the maximum operating temperature by approximately 10° C (50° F).

Using polyurea as a thickener for lubricating fluids is one of the most significant lubrication developments in more than 30 years. Polyurea grease performance is outstanding in a wide range of bearing applications.

CONSISTENCY

Greases may vary in consistency from semi-fluids that are hardly thicker than a viscous oil to solid grades almost as hard as a soft wood.

Consistency is measured by a penetrometer in which a standard weighted cone is dropped into the grease. The distance the cone penetrates (measured in tenths of a millimeter in a specific time) is the penetration number.

The National Lubricating Grease Institute (NLGI) classification of grease consistency is shown in table D-15 below:

TABLE D-14. GENERAL CHARACTERISTICS OF THICKENERS USED WITH PETROLEUM-BASED OILS

Thickener	Typical Dropping Point		Maximum Temperature		Typical Water Resistance
	°C	°F	°C	°F	
Lithium soap	**193**	380	**121**	250	Good
Lithium complex	**260+**	500+	**149**	300	Good
Aluminum complex	**249**	480	**149**	300	Excellent
Calcium sulfonate	**299**	570	**177**	350	Excellent
Polyurea	**260**	500	**149**	300	Good

TABLE D-15. NLGI CLASSIFICATIONS

NLGI Grease Grades	Penetration No.
0	355-385
1	310-340
2	265-295
3	220-250
4	175-205
5	130-160
6	85-115

Grease consistency is not fixed; it normally becomes softer when sheared or worked. In the laboratory, this working is accomplished by forcing a perforated plate up and down through a closed container of grease. This working does not compare with the violent shearing action that takes place in a bearing and does not necessarily correlate with actual performance.

LOW TEMPERATURES

Starting torque in a grease-lubricated bearing at low temperatures can be critical. Some greases may function adequately as long as the bearing is operating, but resistance to initial movement may be excessive. In certain smaller machines, starting may be impossible when very cold. Under such operating circumstances, greases containing low-temperature characteristic oils are generally required.

If the operating temperature range is wide, synthetic greases offer advantages. Synthetic greases are available to provide very low starting and running torque at temperatures as low as -73° C (-100° F). In certain instances, these greases perform better in this respect than oil.

An important point concerning lubricating greases is that the starting torque is not necessarily a function of the consistency or the channel properties of the grease. Starting torque is more a function of the individual rheological properties of a particular grease and is best evaluated by application experience.

HIGH TEMPERATURES

The high temperature limit for lubricating greases is generally a function of the thermal and oxidation stability of the fluid and the effectiveness of the oxidation inhibitors. Grease temperature ranges are defined by both the dropping point of the grease thickener and composition of the base oil. Table D-16 shows the temperature ranges of various base oils used in grease formulations.

A rule of thumb, developed from years of testing grease-lubricated bearings, indicates that grease life is halved for every 10° C (50° F) increase in temperature. For example, if a particular grease provides 2000 hours of life at 90° C (194° F), by raising the temperature to 100° C (212° F), reduction in life to approximately 1000 hours would result. On the other hand, 4000 hours could be expected by lowering the temperature to 80° C (176° F).

Thermal stability, oxidation resistance and temperature limitations must be considered when selecting greases for high-temperature applications. In non-relubricatable applications, highly refined mineral oils or chemically stable synthetic fluids are required as the oil component of greases for operation at temperatures above 121° C (250° F).

TABLE D-16. TEMPERATURE RANGES FOR BASE OILS USED IN LUBRICATING GREASES

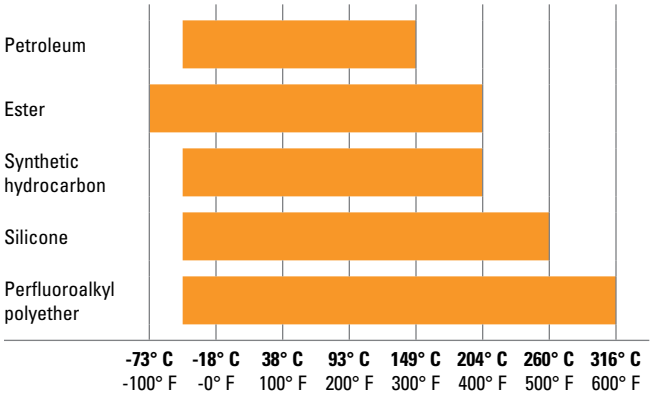

CONTAMINATION

Abrasive Particles

When roller bearings operate in a clean environment, the primary cause of damage is the eventual fatigue of the surfaces where rolling contact occurs. However, when particle contamination enters the bearing system, it is likely to cause damage such as bruising, which can shorten bearing life.

When dirt from the environment or metallic wear debris from some component in the application are allowed to contaminate the lubricant, wear can become the predominant cause of bearing damage. If bearing wear becomes significant, changes will occur to critical bearing dimensions that could adversely affect machine operation.

Bearings operating in a contaminated lubricant exhibit a higher initial rate of wear than those running in an uncontaminated lubricant. With no further contaminant ingress, this wear rate quickly diminishes. The contamination particles are reduced in size as they pass through the bearing contact area during normal operation.

Water

Water and moisture can be particularly conducive to bearing damage. Lubricating greases may provide a measure of protection from this contamination. Certain greases, such as calcium and aluminum-complex, are highly water-resistant.

Sodium-soap greases are water-soluble and should not be used in applications involving water.

Either dissolved or suspended water in lubricating oils can exert a detrimental influence on bearing fatigue life. Water can cause bearing etching that also can reduce bearing fatigue life. The exact mechanism by which water lowers fatigue life is not fully understood. It has been suggested that water enters micro-cracks in the bearing rings that are caused by repeated stress cycles. This leads to corrosion and hydrogen embrittlement in the micro-cracks, reducing the time required for these cracks to propagate to an unacceptable-sized spall.

Water-based fluids, such as water glycol and invert emulsions, also have shown a reduction in bearing fatigue life. Although water from these sources is not the same as contamination, the results support the previous discussion concerning water-contaminated lubricants.

GREASE SELECTION

The successful use of bearing grease depends on the physical and chemical properties of the lubricant as well as application and environmental conditions. Because the choice of grease for a particular bearing under certain service conditions is often difficult to make, you should consult with your lubricant supplier or equipment maker for specific questions about lubrication requirements for your application. You also can contact your Timken engineer for general lubrication guidelines for any application.

Grease must be carefully selected with regard to its consistency at operating temperature. It should not exhibit thickening, separation of oil, acid formation or hardening to any marked degree. It should be smooth, non-fibrous and entirely free from chemically active ingredients. Its dropping point should be considerably higher than the operating temperature.

Timken® application-specific lubricants were developed by leveraging our knowledge of tribology and antifriction bearings, and how these two elements affect overall system performance. Timken lubricants help bearings and related components operate effectively in demanding industrial operations. High-temperature, anti-wear and water-resistant additives offer superior protection in challenging environments. Table D-17 provides an overview of the Timken greases available for general applications. Contact your Timken engineer for a more detailed publication on Timken lubrication solutions.

TABLE D-17. GREASE LUBRICATION SELECTION GUIDE

ENVIRONMENT		APPLICATION
High Wear • Moderate Loads Moderate Speeds Moderate Temperatures	Timken Premium All-Purpose Industrial Grease	Agriculture • Bushings/Ball Joints Truck and Auto Wheel Bearings Heavy-Duty Industrial
Extreme Heat • Heavy Loads High Sliding Wear Dirty Environments Slow Speeds • Shock Loading	Timken Construction and Off-Highway Grease	Agriculture/Mining • Cement Plants Construction/Off Road • Rock Quarry Earth-Moving Equipment Fleet Equipment • Heavy Industry Pivot Pins/Splined Shafts
Wet and Corrosive Conditions Quiet Environments • Light Loads Moderate to High Speeds Moderate Temperatures Light Load Moderate Water	Timken Ball Bearing Pillow Block Grease	Lightly Loaded Pillow Blocks Idler Pulleys • Oven Conveyors Electric Motors • Fans • Pumps Alternators • Generators
Corrosive Media • Extreme Heat Heavy Loads • Wet Conditions Slow to Moderate Speeds	Timken Mill Grease	Aluminum Mills • Paper Mills Steel Mills • Offshore Rigs Power Generation
Incidental Food Contact Hot and Cold Temperatures Moderate to High Speeds Medium Loads	Timken Food Safe Grease	Food and Beverage Industries Pharmaceuticals
Extreme Low and High Temperatures Severe Loads Corrosive Media Slow to Moderate Speeds	Timken Synthetic Industrial Grease	Wind Energy Main Bearing Pulp and Paper Machines General Heavy Industry Marine Applications Centralized Grease Systems
Moderate Speeds Light to Moderate Loads Moderate Temperatures Moderate Water	Timken Multi-Use Lithium Grease	General Industrial Applications Pins and Bushings • Track Rollers Water Pumps Plain and Antifriction Bearings

This selection guide is not intended to replace the specifications by the equipment builder, who is responsible for its performance.

Many bearing applications require lubricants with special properties or lubricants formulated specifically for certain environments, such as:

- Friction oxidation (fretting corrosion).
- Chemical and solvent resistance.
- Food handling.

For assistance with these or other areas requiring special lubricants, consult your Timken engineer.

GREASE USE GUIDELINES

It is important to use the proper amount of grease in the application. In typical industrial applications, the bearing cavity should be kept approximately one-third to one-half full. Less grease may result in the bearing being starved for lubrication. More grease may result in churning. Both conditions may result in excessive heat generation. As the grease temperature rises, viscosity decreases and the grease becomes thinner. This can reduce the lubricating effect and increase leakage of the grease from the bearing. It also may cause the grease components to separate, leading to a general breakdown of the lubricant properties. As the grease breaks down, bearing torque increases. In the case of excess grease resulting in churning, torque may also increase due to the resistance caused by the grease.

For best results, there should be ample space in the housing to allow room for excess grease to be thrown from the bearing. However, it is equally important that the grease be retained all around the bearing. If a large void exists between the bearings, grease closures should be used to prevent the grease from leaving the bearing area.

Only in low-speed applications may the housing be entirely filled with grease. This method of lubrication is a safeguard against the entry of foreign matter, where sealing provisions are inadequate for exclusion of contaminants or moisture.

During periods of non-operation, it is often wise to completely fill the housings with grease to protect the bearing surfaces. Prior to restarting operation, remove the excess grease and restore the proper level.

Applications utilizing grease lubrication should have a grease fitting and a vent at opposite ends of the housing near the top. A drain plug should be located near the bottom of the housing to allow the old grease to purge from the bearing.

Bearings should be relubricated at regular intervals to help prevent damage. Relubrication intervals are difficult to determine. If plant practice or experience with other applications is not available, consult your lubricant supplier.

Timken offers a range of lubricants to help bearings and related components operate effectively in demanding industrial operations. High-temperature, anti-wear and water-resistant additives offer greater protection in challenging environments. Timken also offers a line of single- and multi-point lubricators to simplify grease delivery.



Fig. D-10. Grease can easily be packed by hand.



Fig. D-11. Mechanical grease packer.

Grease application methods

Grease, in general, is easier to use than oil in industrial bearing applications. Most bearings that are initially packed with grease require periodic relubrication to operate efficiently.

Grease should be packed into the bearing so that it gets between the rolling elements.

Grease can be easily packed into small- and medium-size bearings by hand (fig. D-10). In shops where bearings are frequently regreased, a mechanical grease packer that forces grease through the bearing under pressure may be appropriate (fig. D-11). Regardless of the method, after packing the internal areas of the bearing, a small amount of grease also should be smeared on the outside of the rollers.

The two primary considerations that determine the relubrication cycle are operating temperature and sealing efficiency. High-operating-temperature applications generally require more frequent regreasing. The less efficient the seals, the greater the grease loss and the more frequently grease must be added.

Grease should be added any time the amount in the bearing falls below the desired amount. The grease should be replaced when its lubrication properties have been reduced through contamination, high temperature, water, oxidation or any other factors. For additional information on appropriate regreasing cycles, consult with the equipment manufacturer or your Timken engineer.

GREASE LUBRICATIONS FOR BEARING/HOUSING ASSEMBLIES

Polyurea and lithium-based greases are normally preferred for general-purpose bearing lubrication and are advantageous in high moisture applications. Both greases have good water-resistant characteristics. For temperature ranges of standard greases, see table D-16.

Frictional torque is influenced by the quantity and the quality of lubricant present. Excessive quantities of grease cause churning. The adverse effects of churn are accelerated with increases in operating speed. The churn results in excessive temperatures, separation of the grease components, and breakdown in lubrication values. In normal-speed applications, the housings should be kept approximately one-third to one-half full. Only in low-speed applications may the housing be entirely filled with grease. This method of lubrication is a safeguard against the entry of foreign matter, where sealing provisions are inadequate for exclusion of contaminants or moisture.

GENERAL-PURPOSE INDUSTRIAL GREASE

Polyurea and and lithium-based greases are typical of greases that can be used to lubricate many Timken bearing applications in all types of standard equipment.

Special consideration should be given to applications where speed, load, temperature or environmental conditions are extreme.

Lithium greases, lithium complex greases, or calcium sulfonate thickened grease are suitable for most centralized, single-point, or manually lubricated product. They should be a smooth, homogeneous and uniform, premium-quality product composed of mineral or synthetic oil, a thickener and appropriate inhibitors (see table D-18).

TABLE D-18. SUGGESTED LITHIUM SOAP, LITHIUM COMPLEX AND CALCIUM SULFONATE GREASE PROPERTIES

Thickener type	Lithium Complex, or equivalent
Consistency	NLGI No.1 or No. 2
Additives	Anti-wear, corrosion and oxidation inhibitors
Base oil	Mineral oil or synthetic
Viscosity at 40° C	ISO VG 150-220
Viscosity index	80 min.
Pour point	-18° C (0° F) max.

They should not contain materials that are corrosive or abrasive to roller bearings. The grease should have excellent mechanical and chemical stability. The grease should contain inhibitors to provide long-term protection against oxidation in high-performance applications and protect the bearings from corrosion in the presence of moisture. The suggested base oil viscosity covers a fairly wide range. Lower viscosity products should be used in high-speed and/or lightly loaded applications to minimize heat generation and torque. Higher viscosity products should be used in moderate- to low-speed applications and under heavy loads to maximize lubricant film thickness. Speed ratings are listed for each size/class part number in the Spherical Roller Bearing Catalog (order no. 10446) on pages 59-88. When application speeds exceed 70 percent of grease speed rating, consider increasing RIC by one ISO clearance range (CNormal to C3). Table D-19 is provided as a reference for typical grease thickener compatibilities. Consult your lubricant supplier for further information for your specific requirement. For general industrial applications, consider a grease that is NLGI No. 1 or No. 2, with a ISO 150 to 220 viscosity grade.

NOTE

Mixing greases can result in improper bearing lubrication. Always follow the specific lubrication instructions of your equipment supplier.

TABLE D-19. GREASE COMPATIBILITY CHART

= Best Choice = Compatible = Borderline = Incompatible	Al Complex	Ba Complex	Ca Stearate	Ca 12 Hydroxy	Ca Complex	Ca Sulfonate	Non-Soap Clay	Li Stearate	Li 12 Hydroxy	Li Complex	Polyurea	Polyurea S S
Aluminum Complex												
Timken Food Safe												
Barium Complex												
Calcium Stearate												
Calcium 12 Hydroxy												
Calcium Complex												
Calcium Sulfonate												
Timken Premium Mill Timken Heavy-Duty Moly												
Clay Non-Soap												
Lithium Stearate												
Lithium 12 Hydroxy												
Lithium Complex												
Polyurea Conventional												
Polyurea Shear Stable												
Timken Multi-Use												
Timken All -Purpose Timken Synthetic												
Timken Pillow Block												

APPLICATION CONSIDERATIONS

For higher-speed applications (operating at 75 percent of the grease speed rating or more), a grease with a lighter base oil viscosity (ISO 100-150) can be considered. Conversely, for lower-speed applications, a grease with a heavier base oil viscosity (ISO 320-460) can be considered. For lower-speed applications operating at colder start-up temperatures (>-18° C [0° F]), consider a softer grease (NLGI grade 1) with an approved EP additive. The lighter grade will allow more grease flow into the bearing contact area and the EP additive will reduce wear during start-up. An ISO 460 base oil viscosity also can be considered.

When lower-speed applications operate at higher temperatures (>149° C [300° F]), consult a local Timken engineer.

GREASE FILL

For normal industrial applications, fill the bearing void to 100 percent full and the housing void to 40 – 60 percent full. For high-speed applications, fill the bearing void to 100 percent full and the housing void to 30 – 40 percent full. The free volume of the bearing can be estimated by first calculating the solid ring volume of the bearing. Then, weigh the bearing and divide the weight by the density of steel. This actual volume can then be subtracted from the solid ring volume. The resultant value is an estimate of the free volume of the bearing available for grease fill. When the grease volume is determined for the application, multiplying this value by the density of the grease will yield the approximate weight of the grease fill. After weighing the grease required, apply approximately 75 percent of the amount into the cage and roller assembly. The remaining amount of grease should then be applied to both inner and outer rings in equal amounts. The preservatives applied to bearing components are compatible with nearly all industrial greases and should not be wiped or cleaned prior to packing the bearing. If in doubt, contact a local Timken engineer.

SPHERICAL ROLLER BEARINGS

Timken® spherical roller bearings feature all of the characteristics that have made Timken renowned – superior design, reliable performance and comprehensive technical support. Spherical roller bearings are designed to manage high radial loads and perform consistently, even when misalignment, marginal lubrication, contamination, extreme speeds and critical application stresses are present.

Nomenclature. D-36
Spherical Roller Bearing Product Data Tables D-37



SPHERICAL ROLLER BEARINGS NOMENCLATURE

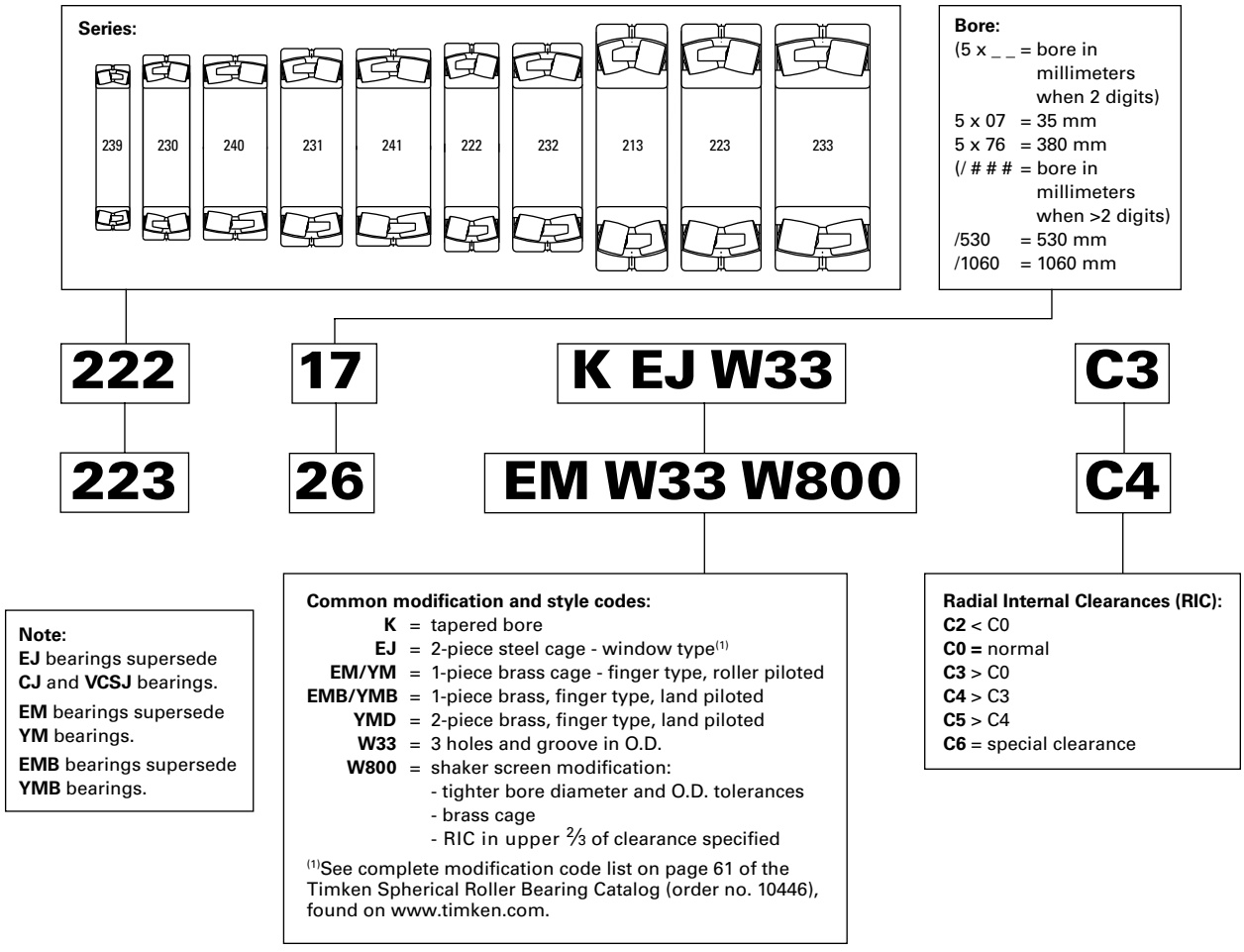

Fig. D-12. Timken® spherical roller bearing nomenclature.

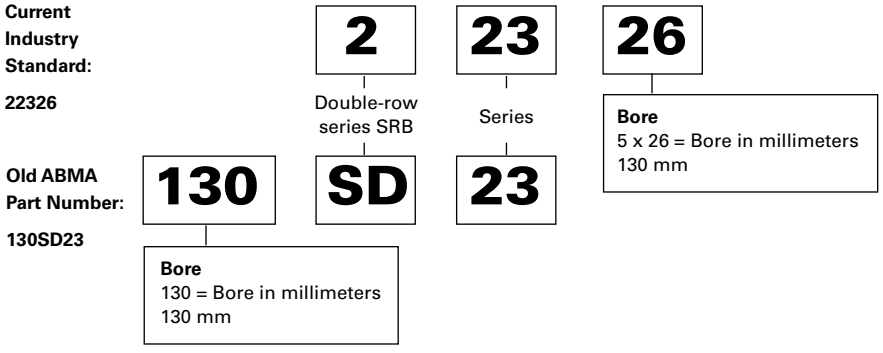

Fig. D-13. Equivalence between current ISO and old ABMA part numbering.

222 SERIES (225, 222 SERIES SAF, SDAF)

- Bearings are available with a tapered bore for adapter-type mounting. To order, add the suffix K to bearing number (e.g., 23120K).
- Consult your Timken engineer and www.timken.com for up-to-date information about the availability of the bearings you have selected.

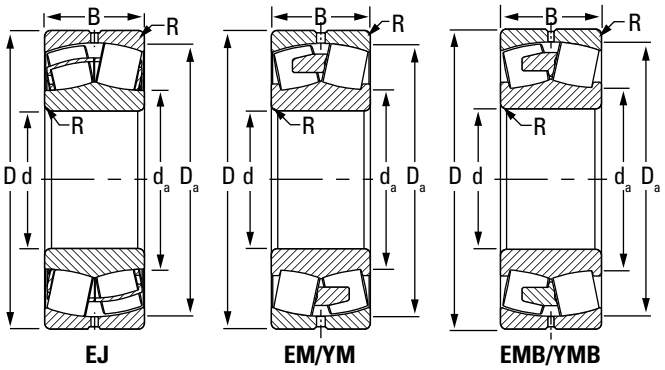

EJ EM/YM EMB/YMB

Bearing Part No.	Bearing Dimensions			Load Ratings		Cage Type	Mounting Data			Equivalent Radial Load Factors[2]				Geometry Factor[3]	Thermal Speed Ratings[4]		Wt.
							Fillet[1] (Max.)	Backing Dia.		Dynamic			Static				
	Bore d	O.D. D	Width B	Dynamic C	Static Co		R	Shaft d_a	Housing D_a	e	$\frac{F_a}{F_r} \le e$ X = 1 Y	$\frac{F_a}{F_r} > e$ X = 0.67 Y	In All Cases Y_0	C_g	Oil	Grease	
	mm in.	**mm** in.	**mm** in.	**kN** lbf.	**kN** lbf.		**mm** in.	**mm** in.	**mm** in.						RPM	RPM	**kg** lbs.
22209	**45** 1.7717	**85** 3.3465	**23** 0.9055	**104** 23500	**101** 22800	EJ / EM	**1** 0.04	**55** 2.2	**77** 3	0.26	2.64	3.93	2.58	0.046	6800	5500	**0.6** 1.3
22210	**50** 1.9685	**90** 3.5433	**23** 0.9055	**112** 25200	**112** 25100	EJ / EM	**1** 0.04	**59** 2.3	**82** 3.2	0.24	2.84	4.23	2.78	0.049	6200	5000	**0.6** 1.3
22211	**55** 2.1654	**100** 3.937	**25** 0.9843	**134** 30100	**134** 30100	EJ / EM	**1.5** 0.06	**66** 2.6	**91** 3.6	0.23	2.95	4.4	2.89	0.052	5800	4700	**0.9** 2.0
22212	**60** 2.3622	**110** 4.3307	**28** 1.1024	**163** 36600	**164** 36900	EJ / EM	**1.5** 0.06	**72** 2.8	**100** 4	0.24	2.84	4.23	2.78	0.055	5500	4400	**1.2** 2.6
22213	**65** 2.5591	**120** 4.7244	**31** 1.2205	**198** 44600	**204** 45900	EJ / EM	**1.5** 0.06	**78** 3.1	**109** 4.3	0.24	2.79	4.15	2.73	0.058	5100	4200	**1.6** 3.5
22214	**70** 2.7559	**125** 4.9213	**31** 1.2205	**205** 46000	**219** 49200	EJ / EM	**1.5** 0.06	**84** 3.3	**114** 4.5	0.23	2.9	4.32	2.84	0.063	4800	3900	**1.6** 3.5
22215	**75** 2.9528	**130** 5.1181	**31** 1.2205	**222** 49900	**240** 54100	EJ	**1.5** 0.06	**88** 3.5	**120** 4.7	0.22	3.14	4.67	3.07	0.062	4600	3700	**1.7** 3.7
22216	**80** 3.1496	**140** 5.5118	**33** 1.2992	**254** 57200	**278** 62500	EJ / EM	**2** 0.08	**95** 3.7	**129** 5.1	0.22	3.14	4.67	3.07	0.065	4300	3500	**2.2** 4.8
22216	**80** 3.1496	**140** 5.5118	**33** 1.2992	**245** 55100	**263** 59200	EJ / EM	**2** 0.08	**95** 3.7	**129** 5.1	0.22	3.14	4.67	3.07	0.065	4400	3600	**2.2** 4.8
22217	**85** 3.3465	**150** 5.9055	**36** 1.4173	**286** 64200	**302** 67900	EJ / EM	**2** 0.08	**101** 4	**139** 5.5	0.22	3.07	4.57	3	0.068	4200	3400	**2.7** 5.9
22218	**90** 3.5433	**160** 6.2992	**40** 1.5748	**355** 79700	**388** 87200	EJ / EM	**2** 0.08	**105** 4.2	**146** 5.8	0.23	2.9	4.31	2.83	0.07	4000	3300	**3.5** 7.7
22219	**95** 3.7402	**170** 6.6929	**43** 1.6929	**385** 86600	**441** 99000	EJ / EM	**2** 0.08	**114** 4.5	**155** 6.1	0.23	2.88	4.29	2.82	0.076	3900	3200	**4.2** 9.2
22220	**100** 3.937	**180** 7.0866	**46** 1.811	**435** 97700	**502** 113000	EJ / EM	**2** 0.08	**120** 4.7	**163** 6.4	0.24	2.85	4.24	2.78	0.079	3800	3100	**5.0** 11.0
22222	**110** 4.3307	**200** 7.874	**53** 2.0866	**555** 125000	**653** 147000	EJ / EM	**2** 0.08	**133** 5.2	**182** 7.2	0.25	2.73	4.06	2.67	0.084	3500	2900	**7.2** 15.8

[1]Maximum shaft or housing fillet radius that bearing corners will clear.
[2]These factors apply for both inch and metric calculations. See Timken Engineering Manual (order no. 10424) for instructions on use.
[3]Geometry constant for Lubrication Life Factor a_{31} is found in the Bearing Ratings section of the Engineering Manual (order no. 10424).
[4]See thermal speed ratings in the Engineering Manual (order no. 10424).
NOTE: Where EJ and EM/EMB have different load ratings, the more conservative one was taken to use for both assemblies.
NOTE: Tolerance and shaft diameters are shown in the tables D-2 and D-3 on pages D-5 and D-6 as variances from nominal bearing bore.

Continued on next page.

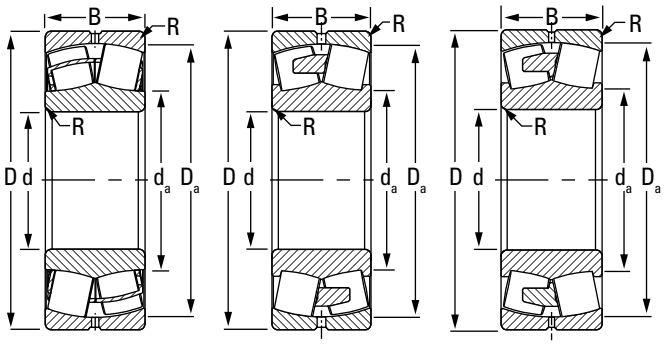

Continued from previous page.

Bearing Part No.	Bearing Dimensions			Load Ratings		Cage Type	Mounting Data			Equivalent Radial Load Factors[2]				Geometry Factor[3]	Thermal Speed Ratings[4]		Wt.
											Dynamic		Static				
	Bore d	O.D. D	Width B	Dynamic C	Static Co		Fillet[1] (Max.) R	Backing Dia. Shaft d_a	Backing Dia. Housing D_a	e	$\frac{F_a}{F_r} \le e$ X = 1 Y	$\frac{F_a}{F_r} > e$ X = 0.67 Y	In All Cases Y_0	C_g	Oil	Grease	
	mm in.	**mm** in.	**mm** in.	**kN** lbf.	**kN** lbf.		**mm** in.	**mm** in.	**mm** in.						RPM	RPM	**kg** lbs.
22224	**120** 4.7244	**215** 8.4646	**58** 2.2835	**647** 145000	**772** 174000	EJ / EM	**2** 0.08	**143** 5.6	**196** 7.7	0.25	2.7	4.02	2.64	0.081	3200	2600	**9.0** 19.8
22226	**130** 5.1181	**230** 9.0551	**64** 2.5197	**757** 170000	**945** 212000	EJ / EM	**2.5** 0.1	**155** 6.1	**210** 8.3	0.26	2.62	3.9	2.56	0.079	2900	2400	**11.3** 24.9
22228	**140** 5.5118	**250** 9.8425	**68** 2.6772	**863** 194000	**1060** 237000	EJ / EM	**2.5** 0.1	**167** 6.6	**228** 9	0.25	2.67	3.98	2.61	0.082	2600	2200	**14.2** 31.2
22230	**150** 5.9055	**270** 10.6299	**73** 2.874	**1000** 225000	**1230** 276000	EJ / EM	**2.5** 0.1	**179** 7	**246** 9.7	0.25	2.69	4	2.63	0.087	2400	2000	**17.8** 39.2
22232	**160** 6.2992	**290** 11.4173	**80** 3.1496	**1170** 263000	**1450** 326000	EJ / EM	**2.5** 0.1	**192** 7.5	**264** 10.4	0.26	2.62	3.91	2.57	0.09	2200	1800	**23.0** 50.6
22234	**170** 6.6929	**310** 12.2047	**86** 3.3858	**1340** 301000	**1680** 379000	EJ / EM	**3** 0.12	**204** 8	**281** 11.1	0.26	2.61	3.89	2.55	0.094	2000	1700	**28.5** 62.7
22236	**180** 7.0866	**320** 12.5984	**86** 3.3858	**1340** 301000	**1700** 382000	EJ / EM	**3** 0.12	**215** 8.5	**292** 11.5	0.25	2.72	4.05	2.66	0.097	1900	1600	**29.1** 64.0
22238	**190** 7.4803	**340** 13.3858	**92** 3.622	**1550** 348000	**1960** 440000	EJ / EMB	**3** 0.12	**226** 8.9	**310** 12.2	0.25	2.67	3.98	2.62	0.1	1800	1500	**36.1** 79.4
22240	**200** 7.874	**360** 14.1732	**98** 3.8583	**1580** 356000	**2010** 452000	EJ / EMB	**3** 0.12	**236** 9.3	**323** 12.7	0.27	2.5	3.72	2.44	0.103	1700	1500	**43.6** 95.9
22244	**220** 8.6614	**400** 15.748	**108** 4.252	**1850** 415000	**2310** 520000	EJ / EMB	**3** 0.12	**261** 10.3	**359** 14.1	0.27	2.51	3.73	2.45	0.11	1500	1300	**59.4** 130.7

[1]Maximum shaft or housing fillet radius that bearing corners will clear.
[2]These factors apply for both inch and metric calculations. See engineering section for instructions on use.
[3]Geometry constant for Lubrication Life Factor a_{31} is found in the Bearing Ratings section of the Engineering Manual (order no. 10424).
[4]See thermal speed ratings in the Engineering Manual (order no. 10424).
NOTE: Where EJ and EM/EMB have different load ratings, the more conservative one was taken to use for both assemblies.
NOTE: Tolerance and shaft diameters are shown in the tables D-2 and D-3 on pages D-5 and D-6 as variances from nominal bearing bore.

223 SERIES (226, 223 SERIES SAF, SDAF)

- Bearings are available with a tapered bore for adapter-type mounting. To order, add the suffix K to bearing number (e.g., 23120K).
- Consult your Timken engineer and www.timken.com for up-to-date information about the availability of the bearings you have selected.

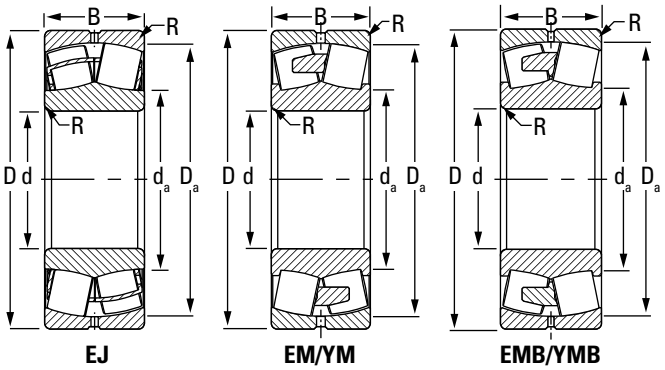

EJ EM/YM EMB/YMB

Bearing Part No.	Bearing Dimensions			Load Ratings		Cage Type	Mounting Data			Equivalent Radial Load Factors[2]				Geometry Factor[3]	Thermal Speed Ratings[4]		Wt.
							Fillet[1] (Max.)	Backing Dia.		Dynamic			Static				
	Bore d	O.D. D	Width B	Dynamic C	Static Co		R	Shaft d_a	Housing D_a	e	$\frac{F_a}{F_r} \le e$ X = 1 Y	$\frac{F_a}{F_r} > e$ X = 0.67 Y	In All Cases Y_0	C_g	Oil	Grease	
	mm in.	mm in.	mm in.	kN lbf.	kN lbf.		mm in.	mm in.	mm in.						RPM	RPM	kg lbs.
22315	75 2.9528	160 6.2992	55 2.1654	450 101000	478 107000	EJ / EM	2 0.08	97 3.8	144 5.7	0.33	2.04	3.04	2	0.071	3900	3300	5.4 11.9
22316	80 3.1496	170 6.6929	58 2.2835	499 112000	534 120000	EJ / EM	2 0.08	103 4.1	153 6	0.33	2.06	3.06	2.01	0.073	3700	3200	6.4 14.1
22317	85 3.3465	180 7.0866	60 2.3622	569 128000	623 140000	EJ / EM	2.5 0.1	110 4.3	162 6.4	0.32	2.11	3.14	2.06	0.076	3500	3000	7.5 16.5
22318	90 3.5433	190 7.4803	64 2.5197	634 143000	703 158000	EJ / EM	2.5 0.1	116 4.6	171 6.7	0.32	2.09	3.11	2.04	0.079	3300	2800	8.8 19.4
22319	95 3.7402	200 7.874	67 2.6378	694 156000	774 174000	EJ / EM	2.5 0.1	122 4.8	180 7.1	0.32	2.1	3.13	2.05	0.082	3000	2600	10.2 22.4
22320	100 3.937	215 8.4646	73 2.874	779 175000	856 193000	EJ / EM	2.5 0.1	130 5.1	193 7.6	0.33	2.06	3.07	2.02	0.072	2800	2400	12.8 28.2
22322	110 4.3307	240 9.4488	80 3.1496	949 213000	1050 236000	EJ / EM	2.5 0.1	144 5.7	215 8.5	0.32	2.08	3.1	2.04	0.076	2500	2100	17.8 39.2
22324	120 4.7244	260 10.2362	86 3.3858	1080 244000	1210 272000	EJ / EM	2.5 0.1	157 6.2	234 9.2	0.32	2.11	3.15	2.07	0.081	2100	1900	22.0 48.4
22326	130 5.1181	280 11.0236	93 3.6614	1250 281000	1410 318000	EJ / EM	3 0.12	169 6.7	252 9.9	0.32	2.11	3.14	2.06	0.085	1900	1700	27.4 60.3
22328	140 5.5118	300 11.811	102 4.0157	1450 326000	1670 375000	EJ / EM	3 0.12	182 7.1	270 10.6	0.33	2.06	3.06	2.01	0.089	1700	1500	34.5 75.9
22330	150 5.9055	320 12.5984	108 4.252	1700 382000	2010 452000	EJ / EMB	3 0.12	194 7.6	288 11.3	0.33	2.08	3.09	2.03	0.093	1600	1400	43.0 94.6
22332	160 6.2992	340 13.3858	114 4.4882	1890 424000	2250 507000	EJ / EMB	3 0.12	207 8.1	306 12	0.32	2.09	3.11	2.04	0.096	1500	1300	51.0 112.2
22334	170 6.6929	360 14.1732	120 4.7244	2100 471000	2510 565000	EJ / EMB	3 0.12	219 8.6	325 12.8	0.32	2.11	3.15	2.07	0.1	1300	1200	59.9 131.8
22336	180 7.0866	380 14.9606	126 4.9606	2290 514000	2770 623000	EJ / EMB	3 0.12	232 9.2	343 13.5	0.32	2.13	3.17	2.08	0.083	1200	1100	70.0 154.0
22338	190 7.4803	400 15.748	132 5.1969	2490 559000	3010 678000	EJ / EMB	4 0.16	245 9.6	361 14.2	0.32	2.12	3.15	2.07	0.086	1200	1000	80.9 178.0
22340	200 7.874	420 16.5354	138 5.4331	2260 507000	2910 655000	YMB	4 0.157	247 9.74	369 14.52	0.33	2.02	3.01	1.98	0.076	1100	970	93.0 204.6

[1]Maximum shaft or housing fillet radius that bearing corners will clear.
[2]These factors apply for both inch and metric calculations. See engineering section for instructions on use.
[3]Geometry constant for Lubrication Life Factor a_{3l} is found in the Bearing Ratings section of the Engineering Manual (order no. 10424).
[4]See thermal speed ratings in the Engineering Manual (order no. 10424).
NOTE: Where EJ and EM/EMB have different load ratings, the more conservative one was taken to use for both assemblies.
NOTE: Tolerance and shaft diameters are shown in the tables D-2 and D-3 on pages D-5 and D-6 as variances from nominal bearing bore.

230 SERIES (230K SERIES SAF, SDAF)

- Bearings are available with a tapered bore for adapter-type mounting. To order, add the suffix K to bearing number (e.g., 23120K).
- Consult your Timken engineer and www.timken.com for up-to-date information about the availability of the bearings you have selected.

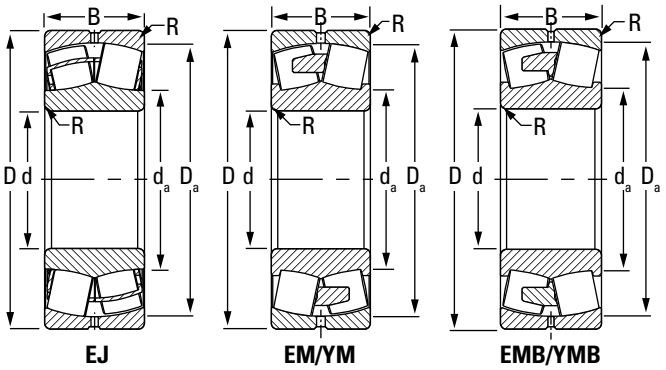

EJ EM/YM EMB/YMB

Bearing Part No.	Bearing Dimensions			Load Ratings		Cage Type	Mounting Data			Equivalent Radial Load Factors[2]				Geometry Factor[3]	Thermal Speed Ratings[4]		Wt.
							Fillet[1] (Max.)	Backing Dia.		Dynamic			Static				
	Bore d	O.D. D	Width B	Dynamic C	Static Co		R	Shaft d_a	Housing D_a	e	$\frac{F_a}{F_r} \le e$ X = 1 Y	$\frac{F_a}{F_r} > e$ X = 0.67 Y	In All Cases Y_0	C_g	Oil	Grease	
	mm in.	**mm** in.	**mm** in.	**kN** lbf.	**kN** lbf.		**mm** in.	**mm** in.	**mm** in.						RPM	RPM	**kg** lbs.
23024	**120** 4.7244	**180** 7.0866	**46** 1.811	**408** 91700	**574** 129000	EJ	**2** 0.08	**134** 5.3	**167** 6.6	0.22	3.02	4.49	2.95	0.084	3300	2700	**4.0** 8.8
24024	**120** 4.7244	**180** 7.0866	**60** 2.3622	**523** 117000	**762** 171000	EJ	**2** 0.08	**132** 5.2	**167** 6.6	0.29	2.32	3.45	2.26	0.083	2700	2200	**5.2** 11.4
23026	**130** 5.1181	**200** 7.874	**52** 2.0472	**518** 116000	**723** 162000	EJ	**2** 0.08	**146** 5.8	**185** 7.3	0.23	2.94	4.37	2.87	0.089	3100	2500	**5.9** 13.0
23028	**140** 5.5118	**210** 8.2677	**53** 2.0866	**551** 124000	**802** 180000	EJ	**2** 0.08	**158** 6.2	**196** 7.7	0.22	3.1	4.61	3.03	0.085	2800	2300	**6.2** 13.6
23030	**150** 5.9055	**225** 8.8583	**56** 2.2047	**621** 140000	**911** 205000	EJ / EM	**2** 0.08	**169** 6.7	**210** 8.3	0.21	3.14	4.68	3.07	0.089	2600	2100	**7.7** 16.9
23032	**160** 6.2992	**240** 9.4488	**60** 2.3622	**705** 159000	**1040** 235000	EJ / EM	**2** 0.08	**180** 7.1	**224** 8.8	0.22	3.12	4.65	3.05	0.093	2400	2000	**9.4** 20.7
23034	**170** 6.6929	**260** 10.2362	**67** 2.6378	**858** 193000	**1250** 282000	EJ / EM	**2** 0.08	**192** 7.6	**242** 9.5	0.22	3.02	4.49	2.95	0.097	2200	1800	**12.8** 28.2
23036	**180** 7.0866	**280** 11.0236	**74** 2.9134	**1020** 229000	**1480** 332000	EJ / EM	**2** 0.08	**204** 8	**260** 10.2	0.23	2.91	4.34	2.85	0.093	2000	1700	**16.8** 37.0
23038	**190** 7.4803	**290** 11.4173	**75** 2.9528	**1060** 239000	**1580** 355000	EJ / EM	**2** 0.08	**214** 8.4	**270** 10.6	0.23	3	4.47	2.93	0.096	1900	1600	**17.8** 39.2
23040	**200** 7.874	**310** 12.2047	**82** 3.2283	**1230** 276000	**1760** 395000	EJ / EM	**2** 0.08	**225** 8.9	**289** 11.4	0.23	2.95	4.4	2.89	0.095	1800	1500	**22.6** 49.7
23044	**220** 8.6614	**340** 13.3858	**90** 3.5433	**1340** 300000	**1970** 443000	EJ / EM	**2.5** 0.1	**247** 9.7	**313** 12.3	0.24	2.77	4.13	2.71	0.105	1700	1400	**29.8** 65.6
23048	**240** 9.4488	**360** 14.1732	**92** 3.622	**1400** 315000	**2140** 480000	EJ / EM	**2.5** 0.1	**267** 10.5	**334** 13.1	0.23	2.91	4.34	2.85	0.111	1500	1300	**31.9** 70.2
23052	**260** 10.2362	**400** 15.748	**104** 4.0945	**1820** 409000	**2740** 617000	EJ / EMB	**3** 0.12	**291** 11.5	**369** 14.5	0.24	2.85	4.24	2.78	0.078	1300	1100	**47.6** 104.7
23056	**280** 11.024	**420** 16.535	**106** 4.173	**1660** 373000	**2790** 627000	YMB	**3** 0.12	**312** 12.3	**389** 15.3	0.23	2.92	4.35	2.86	0.088	1100	930	**51.0** 112.2

[1]Maximum shaft or housing fillet radius that bearing corners will clear.
[2]These factors apply for both inch and metric calculations. See engineering section for instructions on use.
[3]Geometry constant for Lubrication Life Factor a_{31} is found in the Bearing Ratings section of the Engineering Manual (order no. 10424).
[4]See thermal speed ratings in the Engineering Manual (order no. 10424).
NOTE: Where EJ and EM/EMB have different load ratings, the more conservative one was taken to use for both assemblies.
NOTE: Tolerance and shaft diameters are shown in the tables D-2 and D-3 on pages D-5 and D-6 as variances from nominal bearing bore.

Continued on next page.

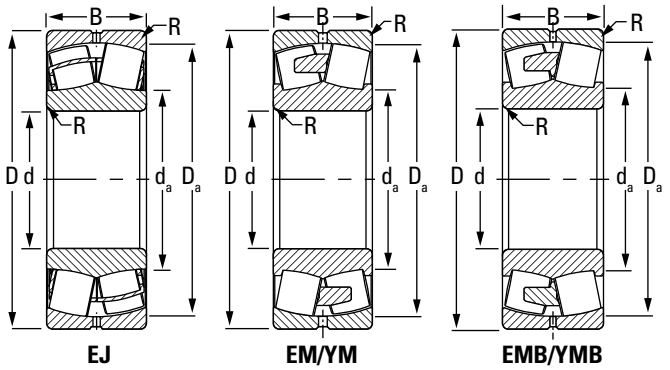

Continued from previous page.

Bearing Part No.	Bearing Dimensions			Load Ratings		Cage Type	Mounting Data			Equivalent Radial Load Factors[2]				Geometry Factor[3]	Thermal Speed Ratings[4]		Wt.
											Dynamic		Static				
	Bore d	O.D. D	Width B	Dynamic C	Static Co		Fillet[1] (Max.) R	Backing Dia. Shaft d_a	Backing Dia. Housing D_a	e	$\frac{F_a}{F_r} \le e$ X = 1 Y	$\frac{F_a}{F_r} > e$ X = 0.67 Y	In All Cases Y_0	C_g	Oil	Grease	
	mm in.	**mm** in.	**mm** in.	**kN** lbf.	**kN** lbf.		**mm** in.	**mm** in.	**mm** in.						RPM	RPM	**kg** lbs.
23060	**300** 11.811	**460** 18.11	**118** 4.646	**2120** 477000	**3540** 796000	YMB	**3** 0.12	**336** 13.2	**425** 16.8	0.24	2.87	4.27	2.8	0.093	980	830	**71.0** 156.2
23064	**320** 12.598	**480** 18.898	**121** 4.764	**2200** 494000	**3850** 867000	YMB	**3** 0.12	**357** 14.1	**444** 17.5	0.23	2.93	4.36	2.86	0.096	910	780	**77.4** 170.3
23068	**340** 13.386	**520** 20.472	**133** 5.236	**2640** 593000	**4620** 1040000	YMB	**4** 0.16	**384** 15.1	**481** 18.9	0.23	2.96	4.4	2.89	0.101	830	710	**102.7** 225.9
23072	**360** 14.173	**540** 21.26	**134** 5.276	**2590** 583000	**4600** 1030000	YMB	**4** 0.16	**403** 15.9	**499** 19.7	0.23	2.94	4.38	2.88	0.102	800	680	**108.3** 238.3
23076	**380** 14.961	**560** 22.047	**135** 5.315	**2800** 630000	**5090** 1140000	YMB	**4** 0.16	**422** 16.6	**520** 20.5	0.22	3.08	4.58	3.01	0.105	740	630	**114.2** 251.2
23080	**400** 15.748	**600** 23.622	**148** 5.827	**3310** 744000	**5950** 1340000	YMB	**4** 0.16	**447** 17.6	**555** 21.9	0.23	2.98	4.44	2.92	0.111	690	590	**148.7** 327.1
23084	**420** 16.535	**620** 24.409	**150** 5.906	**3450** 774000	**6360** 1430000	YMB	**4** 0.16	**467** 18.4	**576** 22.7	0.22	3.05	4.54	2.98	0.114	650	560	**156.0** 343.2
23088	**440** 17.323	**650** 25.591	**157** 6.181	**3750** 844000	**6970** 1570000	YMB	**5** 0.2	**489** 19.3	**603** 23.7	0.22	3.04	4.53	2.97	0.117	610	520	**180.0** 396.0
23092	**460** 18.11	**680** 26.772	**163** 6.417	**4060** 913000	**7570** 1700000	YMB	**5** 0.2	**512** 20.1	**631** 24.9	0.22	3.06	4.56	2.99	0.118	580	500	**205.0** 451.0
23096	**480** 18.898	**700** 27.559	**165** 6.496	**4170** 938000	**7980** 1790000	YMB	**5** 0.2	**532** 21	**651** 25.6	0.22	3.14	4.67	3.07	0.124	550	470	**215.0** 473.0
230/500	**500** 19.685	**720** 28.347	**167** 6.575	**4290** 965000	**8160** 1840000	YMB	**5** 0.2	**550** 21.7	**673** 26.5	0.21	3.26	4.85	3.18	0.126	530	460	**222.0** 488.4
230/530	**530** 20.866	**780** 30.709	**185** 7.284	**5150** 1160000	**9720** 2190000	YMB	**5** 0.2	**588** 23.2	**725** 28.6	0.21	3.14	4.68	3.07	0.132	480	420	**302.6** 665.7

[1]Maximum shaft or housing fillet radius that bearing corners will clear.
[2]These factors apply for both inch and metric calculations. See engineering section for instructions on use.
[3]Geometry constant for Lubrication Life Factor a_{31} is found in the Bearing Ratings section of the Engineering Manual (order no. 10424).
[4]See thermal speed ratings in the Engineering Manual (order no. 10424).
NOTE: Where EJ and EM/EMB have different load ratings, the more conservative one was taken to use for both assemblies.
NOTE: Tolerance and shaft diameters are shown in the tables D-2 and D-3 on pages D-5 and D-6 as variances from nominal bearing bore.

231 SERIES (231, 231K SERIES SDAF)

- Bearings are available with a tapered bore for adapter-type mounting. To order, add the suffix K to bearing number (e.g., 23120K).
- Consult your Timken engineer and www.timken.com for up-to-date information about the availability of the bearings you have selected.

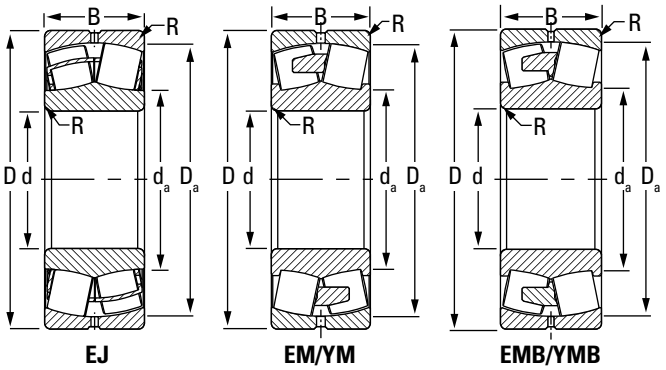

EJ EM/YM EMB/YMB

Bearing Part No.	Bearing Dimensions			Load Ratings		Cage Type	Mounting Data			Equivalent Radial Load Factors[2]				Geometry Factor[3]	Thermal Speed Ratings[4]		Wt.
							Fillet[1] (Max.)	Backing Dia.		Dynamic			Static				
	Bore d	O.D. D	Width B	Dynamic C	Static Co		R	Shaft d_a	Housing D_a	e	$\frac{F_a}{F_r} \le e$ X = 1 Y	$\frac{F_a}{F_r} > e$ X = 0.67 Y	In All Cases Y_0	C_g	Oil	Grease	
	mm in.	**mm** in.	**mm** in.	**kN** lbf.	**kN** lbf.		**mm** in.	**mm** in.	**mm** in.						RPM	RPM	**kg** lbs.
23152	**260** 10.236	**440** 17.323	**144** 5.669	**2440** 549000	**3910** 879000	YMB	**3** 0.12	**302** 11.9	**400** 15.7	0.30	2.23	3.31	2.18	0.086	870	760	**90.0** 198.0
23156	**280** 11.024	**460** 18.11	**146** 5.748	**2530** 570000	**4140** 930000	YMB	**4** 0.16	**320** 12.6	**419** 16.5	0.30	2.26	3.36	2.21	0.09	800	710	**94.5** 207.9
23160	**300** 11.811	**500** 19.685	**160** 6.299	**3070** 691000	**5110** 1150000	YMB	**4** 0.16	**345** 13.6	**453** 17.8	0.30	2.25	3.35	2.20	0.093	710	630	**128.7** 283.1
23164	**320** 12.598	**540** 21.26	**176** 6.929	**3650** 819000	**5930** 1330000	YMB	**4** 0.16	**367** 14.4	**490** 19.3	0.31	2.14	3.19	2.10	0.099	650	580	**167.2** 367.8
23168	**340** 13.386	**580** 22.835	**190** 7.48	**4110** 924000	**6830** 1540000	YMB	**4** 0.16	**397** 15.6	**526** 20.7	0.30	2.22	3.30	2.17	0.103	590	530	**210.3** 462.7
23172	**360** 14.173	**600** 23.622	**192** 7.559	**4250** 956000	**7280** 1640000	YMB	**4** 0.16	**419** 16.5	**546** 21.5	0.29	2.29	3.42	2.24	0.106	560	500	**222.1** 488.6
23176	**380** 14.961	**620** 24.409	**194** 7.638	**4490** 1010000	**7580** 1700000	YMB	**4** 0.16	**431** 17	**566** 22.3	0.30	2.28	3.39	2.23	0.109	530	470	**232.6** 511.7
23180	**400** 15.748	**650** 25.591	**200** 7.874	**4770** 1070000	**8110** 1820000	YMB	**5** 0.2	**454** 17.9	**594** 23.4	0.29	2.32	3.46	2.27	0.11	500	450	**261.6** 575.5
23184	**420** 16.535	**700** 27.559	**224** 8.819	**5720** 1290000	**9640** 2170000	YMB	**5** 0.2	**480** 18.9	**636** 25.1	0.31	2.21	3.20	2.16	0.117	450	410	**350.8** 771.8
23188	**440** 17.323	**720** 28.347	**226** 8.898	**5970** 1340000	**10300** 2310000	YMB	**5** 0.2	**500** 19.7	**657** 25.9	0.30	2.26	3.37	2.21	0.117	430	390	**367.8** 809.2
23192	**460** 18.11	**760** 29.921	**240** 9.449	**6500** 1460000	**11100** 2500000	YMB	**6** 0.24	**524** 20.6	**692** 27.2	0.30	2.24	3.33	2.19	0.123	410	370	**436.9** 961.2
23196	**480** 18.898	**790** 31.102	**248** 9.764	**7110** 1600000	**12400** 2790000	YMB	**6** 0.24	**547** 21.5	**719** 28.3	0.30	2.26	3.36	2.21	0.124	380	340	**490.4** 1078.9

[1]Maximum shaft or housing fillet radius that bearing corners will clear.
[2]These factors apply for both inch and metric calculations. See engineering section for instructions on use.
[3]Geometry constant for Lubrication Life Factor a_{31} is found in the Bearing Ratings section of the Engineering Manual (order no. 10424).
[4]See thermal speed ratings in the Engineering Manual (order no. 10424).
NOTE: Tolerance and shaft diameters are shown in the tables D-2 and D-3 on pages D-5 and D-6 as variances from nominal bearing bore.

232 SERIES (232, 232K SERIES SDAF)

- Bearings are available with a tapered bore for adapter-type mounting. To order, add the suffix K to bearing number (e.g., 23120K).
- Consult your Timken engineer and www.timken.com for up-to-date information about the availability of the bearings you have selected.

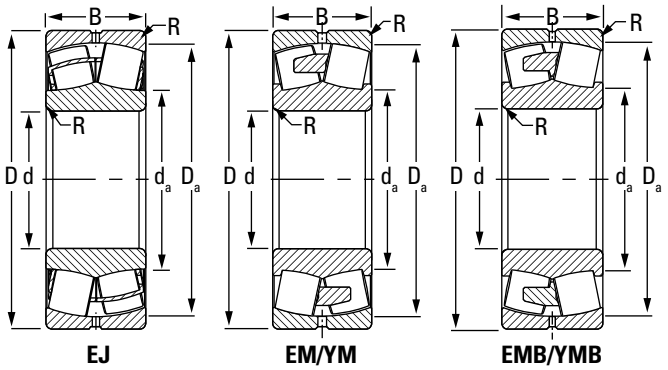

EJ EM/YM EMB/YMB

Bearing Part No.	Bearing Dimensions			Load Ratings		Cage Type	Mounting Data			Equivalent Radial Load Factors[2]				Geometry Factor[3]	Thermal Speed Ratings[4]		Wt.
							Fillet[1] (Max.)	Backing Dia.		Dynamic			Static				
	Bore d	O.D. D	Width B	Dynamic C	Static Co		R	Shaft d_a	Housing D_a	e	$\frac{F_a}{F_r} \le e$ X = 1 Y	$\frac{F_a}{F_r} > e$ X = 0.67 Y	In All Cases Y_0	C_g	Oil	Grease	
	mm in.	**mm** in.	**mm** in.	**kN** lbf.	**kN** lbf.		**mm** in.	**mm** in.	**mm** in.						RPM	RPM	**kg** lbs.
23248	**240** 9.449	**440** 17.323	**160** 6.299	**2780** 625000	**4150** 932000	YMB	**3** 0.12	**281** 11.1	**394** 15.5	0.35	1.92	2.86	1.88	0.082	760	680	**108.1** 237.8
23252	**260** 10.236	**480** 18.898	**174** 6.85	**3210** 721000	**4830** 1090000	YMB	**4** 0.16	**308** 12.1	**430** 16.9	0.34	1.98	2.95	1.94	0.087	680	610	**140.1** 308.2
23256	**280** 11.024	**500** 19.685	**176** 6.929	**3360** 756000	**5240** 1180000	YMB	**4** 0.16	**329** 13	**450** 17.7	0.33	2.07	3.08	2.02	0.092	620	560	**149.7** 329.3
23260	**300** 11.811	**540** 21.26	**192** 7.559	**3840** 864000	**6150** 1380000	YMB	**4** 0.16	**353** 13.9	**482** 19	0.34	2.00	2.98	1.96	0.095	560	510	**194.5** 427.9
23264	**320** 12.598	**580** 22.835	**208** 8.189	**4350** 978000	**7060** 1590000	YMB	**4** 0.16	**379** 14.9	**516** 20.3	0.34	1.98	2.94	1.93	0.101	510	460	**245.1** 539.2
23268	**340** 13.386	**620** 24.409	**224** 8.819	**5160** 1160000	**8200** 1840000	YMB	**5** 0.2	**399** 15.7	**554** 21.8	0.35	1.91	2.84	1.86	0.103	460	420	**301.5** 663.3
23272	**360** 14.173	**650** 25.591	**232** 9.134	**5530** 1240000	**8790** 1980000	YMB	**5** 0.2	**420** 16.5	**583** 22.9	0.35	1.95	2.91	1.91	0.109	430	400	**338.6** 744.9
23276	**380** 14.961	**680** 26.772	**240** 9.449	**5970** 1340000	**9520** 2140000	YMB	**5** 0.2	**442** 17.4	**611** 24.1	0.34	1.98	2.95	1.94	0.11	410	370	**379.4** 834.7
23280	**400** 15.748	**720** 28.347	**256** 10.079	**6720** 1510000	**10800** 2430000	YMB	**5** 0.2	**466** 18.4	**646** 25.4	0.34	1.96	2.93	1.92	0.116	370	340	**457.5** 1006.5
23284	**420** 16.535	**760** 29.921	**272** 10.709	**7360** 1650000	**11800** 2660000	YMB	**6** 0.24	**490** 19.3	**681** 26.8	0.35	1.90	2.83	1.86	0.119	350	320	**525.0** 1155.0
23288	**440** 17.323	**790** 31.102	**280** 11.024	**8090** 1820000	**13200** 2970000	YMB	**6** 0.24	**512** 20.1	**710** 28	0.35	1.95	2.91	1.91	0.123	320	300	**602.0** 1324.4

[1]Maximum shaft or housing fillet radius that bearing corners will clear.
[2]These factors apply for both inch and metric calculations. See engineering section for instructions on use.
[3]Geometry constant for Lubrication Life Factor a_{31} is found in the Bearing Ratings section of the Engineering Manual (order no. 10424).
[4]See thermal speed ratings in the Engineering Manual (order no. 10424).
NOTE: Tolerance and shaft diameters are shown in the tables D-2 and D-3 on pages D-5 and D-6 as variances from nominal bearing bore.

SAF SPHERICAL ROLLER BEARING PILLOW BLOCKS

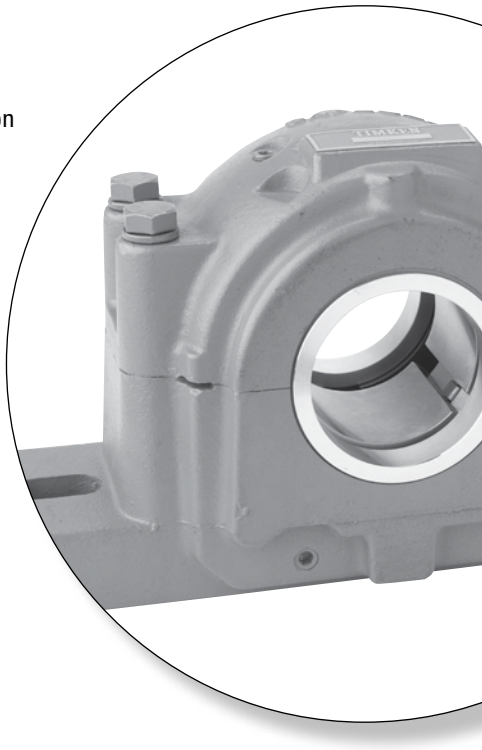

Spherical roller bearing pillow blocks combine rugged cast-iron or steel housings with high-capacity bearings to meet the toughest demands of industry. Each pillow block contains an advanced-design spherical roller bearing with improved geometry and raceway finish for maximized load capacity and service life. Integrated housing and bearing features enhance unit lubrication characteristics. Multiple sealing options protect against contamination.

Nomenclature D-46
Introduction D-47
Design and Construction D-47
Mounting D-48
Lubrication D-49
Seals D-49
Load Ratings and Life D-49
Inch Tapered Bore Mounting
SAF225 and SAF226 Series D-50
Inch Tapered Bore Mounting
SDAF225 and SDAF226 Series D-60
Inch Tapered Bore Mounting
SAF230K, SDAF230K Series D-64
Inch Tapered Bore Mounting
SDAF231K and SDAF232K Series D-68
Inch Straight Bore Mounting
SAF222 and SAF223 Series D-70
Inch Straight Bore Mounting
SDAF222 and SDAF223 Series D-72
Inch Straight Bore Mounting
SDAF231 and SDAF232 Series D-74
Inch Shaft Diameters D-76
Inch TU Take-Up Units Series D-77
Inch TTU Take-Up Units Series D-78
Inch DUSTAC™ Shaft Seals D-80
Inch Sine Bar Gages D-81

SAF HOUSED UNIT NOMENCLATURE

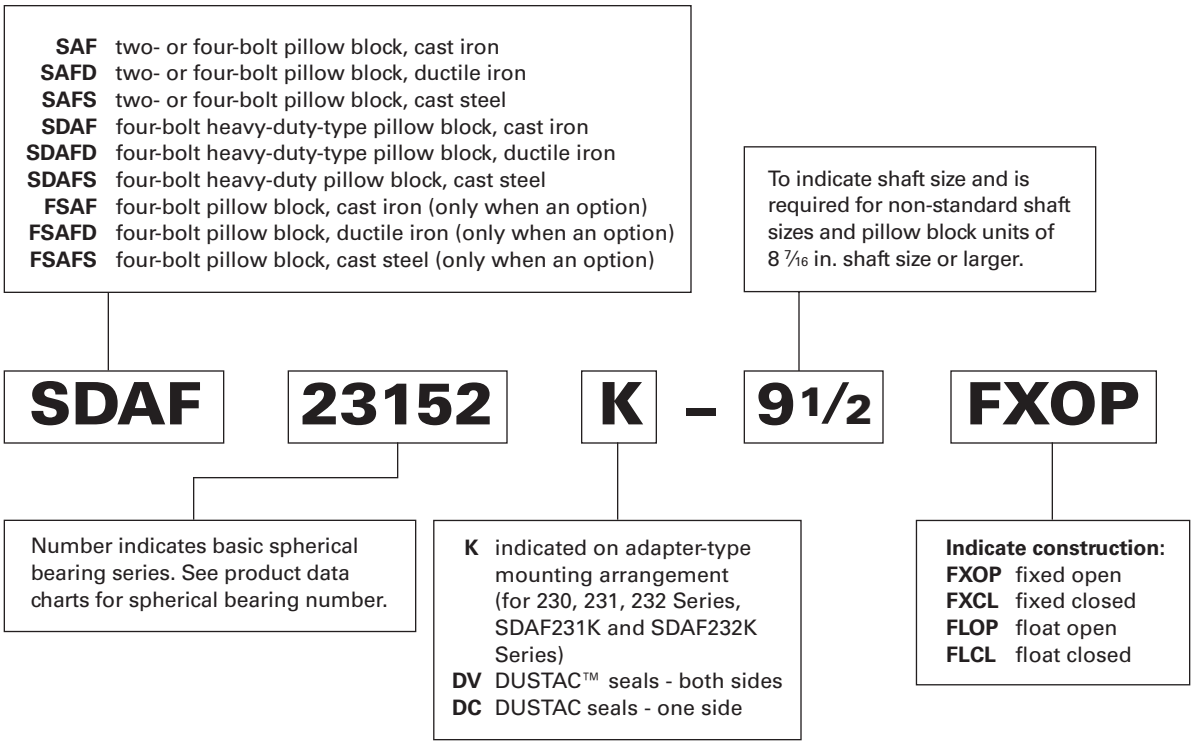

Fig. D-14. Pillow blocks.

SAF HOUSED UNIT INTRODUCTION

Timken's capabilities in engineering and manufacturing heavy-duty pillow blocks provide important user benefits. In addition, Timken's worldwide sales organization is staffed with experienced engineers who are available for consultation on any pillow block or bearing application. Our expert engineering assistance also is available for applications involving shaft sizes 1016 mm (40 in.) and larger, such as BOF trunnions, bridge blocks and ball mills. If your design calls for shaft sizes or loads not listed in this catalog, contact your Timken engineer for information about availability of special units.

- **Sizes:** 35-300 mm shafts (1 3⁄8 up to 11 7⁄8 in.). Special shaft sizes up to 1000 mm (39 3⁄8 in.) and beyond.
- **Applications:** Conveyors, ball mills, casters, rolling mills, heavy movable structures.
- **Features:** Split construction for convenient assembly and disassembly. These units include pry tool slots and the exclusive Pry-Lug fulcrum, which simplifies bearing inspection, service and replacement.
- **Benefits:** Caps can be removed easily and quickly without damage to the bearing or housing.

DESIGN AND CONSTRUCTION

Timken supplies pillow blocks equipped with either tapered bore bearings with adapters for mounting on straight shafts or cylindrical bore bearings for assembly on shouldered shafts.

Timken uses a system of doweling caps and bases together at an early stage of manufacturing, so that they remain a single unit during machining. They are not interchangeable as separate parts and become precisely mated components, helping to ensure a precise fit. Timken manufactures pillow blocks in two styles: SAF and SDAF. The larger SDAF block is suggested for extreme-duty applications.

Standard caps and bases are made from high-grade, stress-relieved cast iron. They also are available in cast steel.

All Timken® split pillow blocks are designed for four-bolt mounting. Certain smaller sizes are normally furnished for two-bolt mounting. These assemblies are indicated in the following tables and can be ordered with an optional four-bolt base.

Four cap bolts are used in most Timken pillow blocks in order to equalize the pressure between the cap and the base, helping to prevent lubricant loss.

The illustration below shows all parts of a pillow block assembly that are described throughout this section.



Fig. D-15.

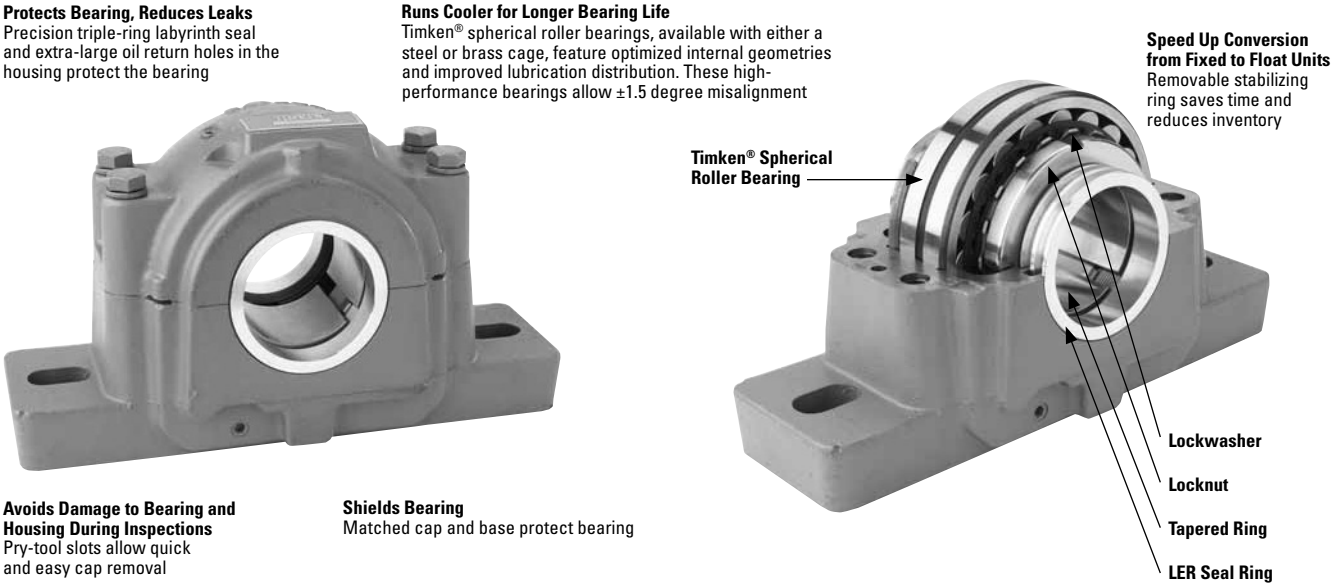

Fig. D-16. SAF housed unit components and features.

MOUNTING

ADAPTER VERSUS STRAIGHT BORE

Usually a spherical roller bearing pillow block assembly is mounted on a straight shaft using a tapered bore bearing and adapter assembly. Standard commercial shafting can be used without additional machining. (Suggested inch shaft diameters are shown in table D-20 on page D-76.) Adapter mount also permits maximum flexibility in the axial positioning of the bearing on the shaft and will accommodate light locational thrust loads. Timken pillow blocks for tapered bore and adapter-mounted bearings are available in series 225, 226, 230, 231K and 232K.

Adapter-mounted spherical roller bearings require the correct removal of diametral clearance from the bearing to prevent relative rotation between inner race and sleeve or shaft. For proper shaft mounting of adapter-type spherical roller bearings, see page D-7.

When application conditions produce heavy thrust loads, or a need exists for exact axial location or a positive shaft interference fit, a direct straight bore mounting may be the best option. This requires a shouldered shaft, machined for proper fit, and a straight bore bearing. Timken pillow block assemblies for straight bore applications are available in series 222, 223, 231 and 232.

Suggested fits for shafts in cylindrical bore spherical roller bearings are shown in the engineering section of this catalog in table D-4 on page D-9. For applications involving heavy shock, vibration, unbalanced rotating loads or other non-standard conditions, consult your Timken engineer.

FIXED AND FLOAT PILLOW BLOCKS

Any style of Timken split pillow blocks can be easily installed at either the float or fixed position on the shaft. For the fixed position, a stabilizing ring is added between the bearing outer-face ring and the housing shoulder to positively locate the shaft and prevent axial movement.

Some applications require centering of the bearing in its housing. To accomplish this, two special-width stabilizing rings can be ordered.

In the float position, the ring is not used, allowing the bearing to move axially (a maximum of $^{3}/_{8}$ in.) to compensate for thermal expansion or contraction of the shaft.

Pillow blocks ordered by the numbers in the dimension tables are fixed units. To order float units, specify by adding suffix float or FL to the pillow block number.

CLOSED-END INSTALLATIONS

In some applications, the shaft end is designed to terminate inside the pillow block. For this design, positive fitting end-cap inserts are available to help seal out contaminants and retain lubricant. Timken heavy-duty end plugs include O-rings for positive sealing.

Designers and installers need to make sure the shaft end does not contact the closure. A minimum of $^{1}/_{8}$ in. clearance at maximum thermal expansion is suggested between the end of the shaft and the closure. Dimension Y in the tables defines the maximum permissible length of the shaft from the centerline of the pillow block housing. If end closure is desired, specify by adding CL (one end closed) to the pillow block assembly number.

NOTE

Failure to employ proper mounting procedures can cause heating and reduced bearing performance.

LUBRICATION

Timken pillow block housings are designed for grease and oil-bath lubrication. They also can be modified easily to accommodate circulating oil- or oil/air-mist systems. Grease fittings or sight gages are available upon request.

A lubrication groove and oil holes are provided in the bearing outer ring. This feature, designated by adding suffix W33 to the bearing number, should be specified whenever re-ordering bearings for pillow blocks. In most cases, the fresh lubricant is fed directly to the center of the bearing between the rows of rollers and distributed to the rest of the bearing. This helps ensure the used lubricant is purged from the bearing.

SEALS

Precision triple-ring labyrinth seals are supplied with all Timken split pillow blocks to help exclude foreign matter and retain lubricants. The pillow block base includes extra-large oil return holes at the bottom of the seal grooves to help prevent leakage past the seals.

For extremely contaminated or abrasive environments, the DUSTAC™ seal offers protection against concentrations of dust or abrasive material that a labyrinth seal cannot keep out. See page D-80 for further information on DUSTAC.

LOAD RATINGS AND LIFE

Load ratings for the spherical roller bearings that are used in pillow blocks are found in the dimension tables on pages D-37 through D-43. Life calculation formulas are found in the Engineering Manual (order no. 10424) on page 48 available on www.timken.com.

In addition to individual bearing selection, the ability of the pillow block to carry the operating load should be considered.

It should be noted that the load rating figures supplied in this catalog are applicable only when the load direction is generally toward the base of the pillow block. If the pillow block must be mounted so the load can be applied in any other direction, consult your Timken engineer.

INCH TAPERED BORE MOUNTING SAF225 AND SAF226 SERIES

- The basic number for ordering complete pillow block assemblies is listed in the table below.
- Each assembly includes the housing cap and base, cap bolts, bearing, bearing adapter, locknut and lockwasher, stabilizing ring and triple-ring seals.
- If only the pillow block housing is desired, use the numbers listed in column headed Housing Only. These units include cap, base, cap bolts, triple-ring seals and stabilizing ring.
- Assemblies and pillow blocks described on this page constitute a fixed unit. To order float units, specify the part number plus the suffix float or FL.
- Assemblies shown are furnished in cast iron. If cast steel is desired, add the letter S to the alpha prefix (e.g., SAFS 22515).
- Four-bolt bases are standard on all assemblies unless as noted.
- If one end closed assembly is required, specify CL in assembly number when ordering.

Pillow Block Assembly[1]	Shaft Dia. S-1[2]	A	B	C	D	E		F	H
						Max.	Min.		
	in.	in.	in.	in.	in.	in.	in.	in.	in.
SERIES SAF225									
SAF22509	1 3/8 **1 7/16** 1 1/2	**2 1/4**	**8 1/4**	**2 3/8**	**13/16**	**7**	**6 1/4**	–	**4 3/8**
SAF22510	1 5/8 **1 11/16** 1 3/4	**2 1/2**	**8 1/4**	**2 3/8**	**15/16**	**7**	**6 1/2**	–	**4 3/4**
SAF22511	1 7/8 **1 15/16** 2	**2 3/4**	**9 5/8**	**2 3/4**	**15/16**	**7 7/8**	**7 3/8**	–	**5 11/32**
SAF22513	2 1/8 **2 3/16** 2 1/4	**3**	**11**	**3 1/8**	**1**	**9 1/2**	**8 1/8**	–	**5 25/32**
SAF22515	2 3/8 **2 7/16** 2 1/2	**3 1/4**	**11 1/4**	**3 1/8**	**1 1/8**	**9 5/8**	**8 5/8**	–	**6 3/8**
FSAF22515	2 3/8 **2 7/16** 2 1/2	**3 1/4**	**11 1/4**	**3 1/8**	**1 1/8**	**9 5/8**	**8 5/8**	**1 7/8**	**6 3/8**
SAF22516	2 5/8 **2 11/16** 2 3/4	**3 1/2**	**13**	**3 1/2**	**1 3/16**	**11**	**9 5/8**	–	**6 7/8**
FSAF22516	2 5/8 **2 11/16** 2 3/4	**3 1/2**	**13**	**3 1/2**	**1 3/16**	**11**	**9 5/8**	**2 1/8**	**6 7/8**
SAF22517	2 13/16 2 7/8 **2 15/16** 3	**3 3/4**	**13**	**3 1/2**	**1 1/4**	**11**	**9 7/8**	–	**7 1/4**
FSAF22517	2 13/16 2 7/8 **2 15/16** 3	**3 3/4**	**13**	**3 1/2**	**1 1/4**	**11**	**9 7/8**	**2 1/8**	**7 1/4**

[1]Bold shaft sizes are standard. When ordering non-standard pillow block assemblies specify the shaft size.
[2]See page D-76, table D-20 for suggested shaft diameter S-1 tolerances.
[3]Includes sleeve, locknut and lockwasher. Add shaft size to order.
[4]Housing Only includes cap, base, cap bolts, triple-ring seals and stabilizing ring as required. When ordering non-standard housing only, specify the shaft size.
[5]Stabilizing ring used for fixed (FX) block; do not use for float (FL) mounting.
NOTE: Speed ratings are found in the dimension tables on pages D-37 through D-43.

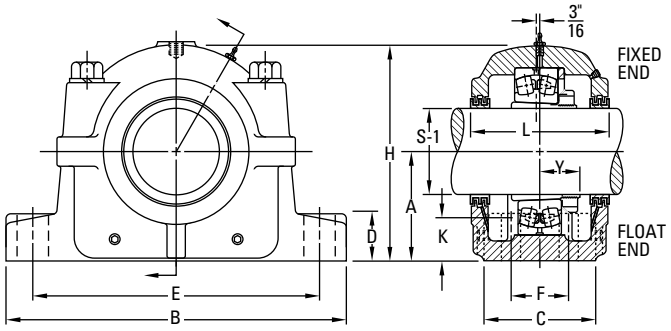

K Oil Level	L	Y	Base Bolts Required No.	 Size	Bearing No.	Adapter Assembly No.[3]	Housing Only[4]	Stabilizing Ring 1 Req'd[5]	Triple Seal 2 Req'd	Assembly Wt.
in.	in.	in.		in.						lbs.
31/32	3 5/8	1 3/32	2	1/2	22209K	SNW-09 x 1 3/8 **SNW-09 x 1 7/16** SNW-09 x 1 1/2	SAF509	SR-9-9	LER 16 **LER 17** LER 18	12
1 3/32	3 5/8	1 3/32	2	1/2	22210K	SNW-10 x 1 5/8 **SNW-10 x 1 11/16** SNW-10 x 1 3/4	SAF510	SR-10-0	LER 19 **LER 20** LER 21	13
1 3/16	3 3/4	1 3/16	2	1/2	22211K	SNW-11 x 1 7/8 **SNW-11 x 1 15/16** SNW-11 x 2	SAF 511	SR-11-0	LER 23 **LER 24** LER 25	16
1 1/8	4 5/16	1 7/32	2	1/2	22213K	SNW-13 x 2 1/8 **SNW-13 x 2 3/16** SNW-13 x 2 1/4	SAF 513	SR-13-0	LER 28 **LER 29** LER 30	19.5
1 1/4	4 3/4	1 9/32	2	5/8	22215K	SNW-15 x 2 3/8 **SNW-15 x 2 7/16** SNW-15 x 2 1/2	SAF515	SR-15-0	LER 35 **LER 37** LER 39	30
1 1/4	4 3/4	1 9/32	4	1/2	22215K	SNW-15 x 2 3/8 **SNW-15 x 2 7/16** SNW-15 x 2 1/2	FSAF515	SR-15-0	LER 35 **LER 37** LER 39	30
1 11/32	4 7/8	1 21/64	2	3/4	22216K	SNW-16 x 2 5/8 **SNW-16 x 2 11/16** SNW-16 x 2 3/4	SAF516	SR-16-13	LER 41 **LER 44** LER 45	37
1 11/32	4 7/8	1 21/64	4	5/8	22216K	SNW-16 x 2 5/8 **SNW-16 x 2 11/16** SNW-16 x 2 3/4	FSAF516	SR-16-13	LER 41 **LER 44** LER 45	37
1 7/16	4 15/16	1 27/64	2	3/4	22217K	SNW-17 x 2 13/16 SNW-17 x 2 7/8 **SNW-17 x 2 15/16** SNW-17 x 3	SAF517	SR-17-14	LER 51 LER 52 **LER 53** LER 54	40
1 7/16	4 15/16	1 27/64	4	5/8	22217K	SNW-17 x 2 13/16 SNW-17 x 2 7/8 **SNW-17 x 2 15/16** SNW-17 x 3	FSAF517	SR-17-14	LER 51 LER 52 **LER 53** LER 54	40

[1]Bold shaft sizes are standard. When ordering non-standard pillow block assemblies specify the shaft size.
[2]See page D-76, table D-20 for suggested shaft diameter S-1 tolerances.
[3]Includes sleeve, locknut and lockwasher. Add shaft size to order.
[4]Housing Only includes cap, base, cap bolts, triple-ring seals and stabilizing ring as required. When ordering non-standard housing only, specify the shaft size.
[5]Stabilizing ring used for fixed (FX) block; do not use for float (FL) mounting.
NOTE: Speed ratings are found in the dimension tables on pages D-37 through D-43.

Continued on next page.

INCH TAPERED BORE MOUNTING SAF225 AND SAF226 SERIES – *continued*

- The basic number for ordering complete pillow block assemblies is listed in the table below.
- Each assembly includes the housing cap and base, cap bolts, bearing, bearing adapter, locknut and lockwasher, stabilizing ring and triple-ring seals.
- If only the pillow block housing is desired, use the numbers listed in column headed Housing Only. These units include cap, base, cap bolts, triple-ring seals and stabilizing ring.
- Assemblies and pillow blocks described on this page constitute a fixed unit. To order float units, specify the part number plus the suffix float or FL.
- Assemblies shown are furnished in cast iron. If cast steel is desired, add the letter S to the alpha prefix (e.g., SAFS 22515).
- Four-bolt bases are standard on all assemblies unless as noted.
- If one end closed assembly is required, specify CL in assembly number when ordering.

Continued from previous page.

Pillow Block Assembly[1]	Shaft Dia. S-1[2]	A	B	C	D	E		F	H
						Max.	Min.		
	in.	in.	in.	in.	in.	in.	in.	in.	in.
	3 1/16								
	3 1/8								
SAF22518	**3 3/16**	**4**	**13 3/4**	**3 7/8**	**1 1/2**	**11 5/8**	**10 3/8**	–	**7 3/4**
	3 1/4								
	3 1/16								
	3 1/8								
FSAF22518	**3 3/16**	**4**	**13 3/4**	**3 7/8**	**1 1/2**	**11 5/8**	**10 3/8**	**2 1/8**	**7 3/4**
	3 1/4								
	3 3/8								
SAF22520	**3 7/16**	**4 1/2**	**15 1/4**	**4 3/8**	**1 3/4**	**13 1/8**	**11 5/8**	–	**8 11/16**
	3 1/2								
	3 3/8								
FSAF22520	**3 7/16**	**4 1/2**	**15 1/4**	**4 3/8**	**1 3/4**	**13 1/8**	**11 5/8**	**2 3/8**	**8 11/16**
	3 1/2								
	3 13/16								
	3 7/8								
SAF22522	**3 15/16**	**4 15/16**	**16 1/2**	**4 3/4**	**2**	**14 1/2**	**12 5/8**	**2 3/4**	**9 9/16**
	4								
	4 1/16								
	4 1/8								
SAF22524	**4 3/16**	**5 1/4**	**16 1/2**	**4 3/4**	**2 1/8**	**14 1/2**	**13 1/4**	**2 3/4**	**10 1/4**
	4 1/4								
	4 5/16								
	4 3/8								
SAF22526	**4 7/16**	**6**	**18 3/8**	**5 1/8**	**2 3/8**	**16**	**14 5/8**	**3 1/4**	**11 9/16**
	4 1/2								
	4 13/16								
	4 7/8								
SAF22528	**4 15/16**	**6**	**20 1/8**	**5 7/8**	**2 3/8**	**17 1/8**	**16**	**3 3/8**	**11 3/4**
	5								
	5 1/8								
SAF22530	**5 3/16**	**6 5/16**	**21 1/4**	**6 1/4**	**2 1/2**	**18 1/4**	**17**	**3 3/4**	**12 1/2**
	5 1/4								

[1]Bold shaft sizes are standard. When ordering non-standard pillow block assemblies specify the shaft size.
[2]See page D-76, table D-20 for suggested shaft diameter S-1 tolerances.
[3]Includes sleeve, locknut and lockwasher. Add shaft size to order.
[4]Housing Only includes cap, base, cap bolts, triple-ring seals and stabilizing ring as required. When ordering non-standard housing only, specify the shaft size.
[5]Stabilizing ring used for fixed (FX) block; do not use for float (FL) mounting.
NOTE: Speed ratings are found in the dimension tables on pages D-37 through D-43.

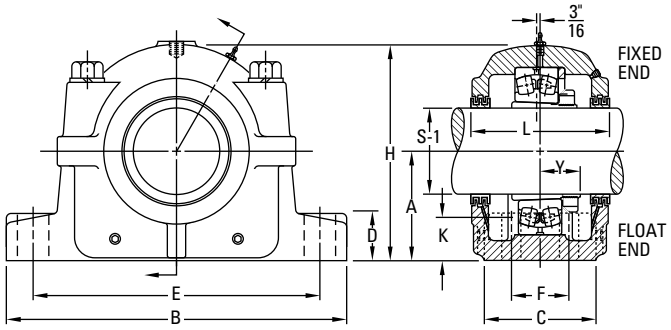

K Oil Level	L	Y	Base Bolts Required No.	 Size	Bearing No.	Adapter Assembly No.[3]	Housing Only[4]	Stabilizing Ring 1 Req'd[5]	Triple Seal 2 Req'd	Assembly Wt.
in.	in.	in.		in.						lbs.
1 17/32	**6 1/4**	**1 37/64**	**2**	**3/4**	**22218K**	SNW-18 x 3 1/16 SNW-18 x 3 1/8 **SNW-18 x 3 3/16** SNW-18 x 3 1/4	**SAF518**	**SR-18-15**	LER 67 LER 68 **LER 69** LER 70	**49**
1 17/32	**6 1/4**	**1 37/64**	**4**	**5/8**	**22218K**	SNW-18 x 3 1/16 SNW-18 x 3 1/8 **SNW-18 x 3 3/16** SNW-18 x 3 1/4	**FSAF518**	**SR-18-15**	LER 67 LER 68 **LER 69** LER 70	**49**
1 3/4	**6**	**1 49/64**	**2**	**7/8**	**22220K**	SNW-20 x 3 3/8 **SNW-20 x 3 7/16** SNW-20 x 3 1/2	**SAF520**	**SR-20-17**	LER 101 **LER 102** LER 103	**65**
1 3/4	**6**	**1 49/64**	**4**	**3/4**	**22220K**	SNW-20 x 3 3/8 **SNW-20 x 3 7/16** SNW-20 x 3 1/2	**FSAF520**	**SR-20-17**	LER 101 **LER 102** LER 103	**65**
1 7/8	**6 3/8**	**1 61/64**	**4**	**3/4**	**22222K**	SNW-22 x 3 13/16 SNW-22 x 3 7/8 **SNW-22 x 3 15/16** SNW-22 x 4	**SAF522**	**SR-22-19**	LER 107 LER 108 **LER 109** LER 110	**81**
1 15/16	**7 3/8**	**2 3/32**	**4**	**3/4**	**22224K**	SNW-24 x 4 1/16 SNW-24 x 4 1/8 **SNW-24 x 4 3/16** SNW-24 x 4 1/4	**SAF524**	**SR-24-20**	LER 111 LER 112 **LER 113** LER 114	**94**
2 7/16	**8**	**2 17/64**	**4**	**7/8**	**22226K**	SNW-26 x 4 5/16 SNW-26 x 4 3/8 **SNW-26 x 4 7/16** SNW-26 x 4 1/2	**SAF526**	**SR-26-0**	LER 115 LER 115 **LER 117** LER 118	**137**
2 1/8	**7 3/4**	**2 13/32**	**4**	**1**	**22228K**	SNW-28 x 4 13/16 SNW-28 x 4 7/8 **SNW-28 x 4 15/16** SNW-28 x 5	**SAF528**	**SR-28-0**	LER 120 LER 121 **LER 122** LER 123	**159**
2 3/16	**8 3/8**	**2 37/64**	**4**	**1**	**22230K**	SNW-30 x 5 1/8 **SNW-30 x 5 3/16** SNW-30 x 5 1/4	**SAF530**	**SR-30-0**	LER 124 **LER 125** LER 126	**189**

[1]Bold shaft sizes are standard. When ordering non-standard pillow block assemblies specify the shaft size.
[2]See page D-76, table D-20 for suggested shaft diameter S-1 tolerances.
[3]Includes sleeve, locknut and lockwasher. Add shaft size to order.
[4]Housing Only includes cap, base, cap bolts, triple-ring seals and stabilizing ring as required. When ordering non-standard housing only, specify the shaft size.
[5]Stabilizing ring used for fixed (FX) block; do not use for float (FL) mounting.
NOTE: Speed ratings are found in the dimension tables on pages D-37 through D-43.

Continued on next page.

INCH TAPERED BORE MOUNTING SAF225 AND SAF226 SERIES – *continued*

- The basic number for ordering complete pillow block assemblies is listed in the table below.
- Each assembly includes the housing cap and base, cap bolts, bearing, bearing adapter, locknut and lockwasher, stabilizing ring and triple-ring seals.
- If only the pillow block housing is desired, use the numbers listed in column headed Housing Only. These units include cap, base, cap bolts, triple-ring seals and stabilizing ring.
- Assemblies and pillow blocks described on this page constitute a fixed unit. To order float units, specify the part number plus the suffix float or FL.
- Assemblies shown are furnished in cast iron. If cast steel is desired, add the letter S to the alpha prefix (e.g., SAFS 22515).
- Four-bolt bases are standard on all assemblies unless as noted.
- If one end closed assembly is required, specify CL in assembly number when ordering.

Continued from previous page.

Pillow Block Assembly[1]	Shaft Dia. S-1[2]	A	B	C	D	E		F	H
						Max.	Min.		
	in.	in.	in.	in.	in.	in.	in.	in.	in.
SAF22532	5 3/8 **5 7/16** 5 1/2	**6 11/16**	**22**	**6 1/4**	**2 5/8**	**19 1/4**	**17 3/8**	**3 3/4**	**13 5/16**
SAF22534	5 13/16 5 7/8 **5 15/16** 6	**7 1/16**	**24 3/4**	**6 3/4**	**2 3/4**	**21 5/8**	**19 3/8**	**4 1/4**	**14 9/16**
SAF22536	6 5/16 6 3/8 **6 7/16** 6 1/2	**7 1/2**	**26 3/4**	**7 1/8**	**3**	**23 5/8**	**20 7/8**	**4 5/8**	**15 1/2**
SAF22538	6 13/16 6 7/8 **6 15/16** 7	**7 7/8**	**28**	**7 1/2**	**3 1/8**	**24 3/8**	**21 5/8**	**4 1/2**	**15 11/16**
SAF22540	7 1/8 **7 3/16** 7 1/4	**8 1/4**	**29 1/2**	**8**	**3 3/8**	**25**	**22 1/2**	**5**	**17 3/16**
SAF22544	7 13/16 7 7/8 **7 15/16** 8	**9 1/2**	**32 3/4**	**8 3/4**	**3 3/4**	**27 7/8**	**24 3/4**	**5 1/4**	**19 5/8**
SERIES SAF226									
SAF22615	2 3/8 **2 7/16** 2 1/2	**4**	**13 3/4**	**3 7/8**	**1 5/8**	**11 5/8**	**10 3/8**	**2 1/8**	**7 9/16**
SAF22616	2 5/8 **2 11/16** 2 3/4	**4 1/4**	**14 1/4**	**3 7/8**	**1 3/4**	**12 5/8**	**10 5/8**	**2 1/8**	**8 1/4**

[1]Bold shaft sizes are standard. When ordering non-standard pillow block assemblies specify the shaft size.
[2]See page D-76, table D-20 for suggested shaft diameter S-1 tolerances.
[3]Includes sleeve, locknut and lockwasher. Add shaft size to order.
[4]Housing Only includes cap, base, cap bolts, triple-ring seals and stabilizing ring as required. When ordering non-standard housing only, specify the shaft size.
[5]Stabilizing ring used for fixed (FX) block; do not use for float (FL) mounting.
NOTE: Speed ratings are found in the dimension tables on pages D-37 through D-43.

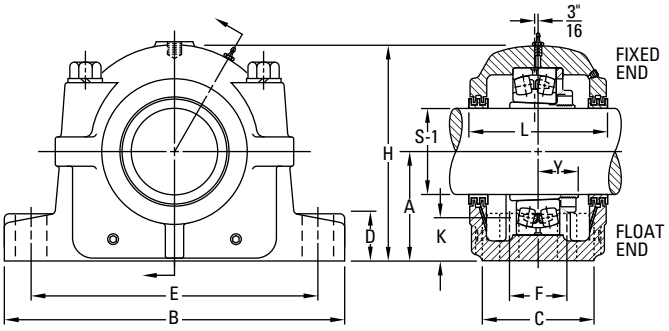

K Oil Level	L	Y	Base Bolts Required No.	 Size	Bearing No.	Adapter Assembly No.[3]	Housing Only[4]	Stabilizing Ring 1 Req'd[5]	Triple Seal 2 Req'd	Assembly Wt.
in.	in.	in.		in.						lbs.
2 3/16	**8 3/4**	**2 49/64**	**4**	**1**	**22232K**	SNW-32 x 5 3/8 **SNW-32 x 5 7/16** SNW-32 x 5 1/2	**SAF532**	**SR-32-0**	LER 129 **LER 130** LER 131	**225**
2 5/16	**9 3/8**	**2 59/64**	**4**	**1**	**22234K**	SNW-34 x 5 13/16 SNW-34 x 5 7/8 **SNW-34 x 5 15/16** SNW-34 x 6	**SAF534**	**SR-34-0**	LER 138 LER 139 **LER 140** LER 141	**300**
2 9/16	**9 11/16**	**2 61/64**	**4**	**1**	**22236K**	SNW-36 x 6 5/16 SNW-36 x 6 3/8 **SNW-36 x 6 7/16** SNW-36 x 6 1/2	**SAF536**	**SR-36-30**	LER 146 LER 147 **LER 148** LER 149	**330**
2 5/8	**10 3/4**	**3 7/64**	**4**	**1 1/4**	**22238K**	SNW-38 x 6 13/16 SNW-38 x 6 7/8 **SNW-38 x 6 15/16** SNW-38 x 7	**SAF538**	**SR-38-32**	LER 153 LER 154 **LER 155** LER 156	**375**
2 11/16	**10 13/16**	**3 9/32**	**4**	**1 1/4**	**22240K**	SNW-40 x 7 1/8 **SNW-40 x 7 3/16** SNW-40 x 7 1/4	**SAF540**	**SR-40-34**	LER 158 **LER 159** LER 160	**445**
3 3/8	**11 1/2**	**3 17/32**	**4**	**1 1/2**	**22244K**	SNW-44 x 7 13/16 SNW-44 x 7 7/8 **SNW-44 x 7 15/16** SNW-44 x 8	**SAF544**	**SR-44-38**	LER 165 LER 166 **LER 167** LER 168	**615**
1 19/32	**5 7/8**	**1 7/8**	**2, 4**	**3/4, 5/8**	**22315K**	SNW-115 x 2 3/8 **SNW-115 x 2 7/16** SNW-115 x 2 1/2	**SAF 615**	**SR-18-15**	LER 36 **LER 37** LER 38	**52**
1 11/16	**6 1/2**	**1 15/16**	**2, 4**	**3/4, 5/8**	**22316K**	SNW-116 x 2 5/8 **SNW-116 x 2 11/16** SNW-116 x 2 3/4	**SAF 616**	**SR-19-16**	LER 43 **LER 44** LER 45	**71**

[1]Bold shaft sizes are standard. When ordering non-standard pillow block assemblies specify the shaft size.
[2]See page D-76, table D-20 for suggested shaft diameter S-1 tolerances.
[3]Includes sleeve, locknut and lockwasher. Add shaft size to order.
[4]Housing Only includes cap, base, cap bolts, triple-ring seals and stabilizing ring as required. When ordering non-standard housing only, specify the shaft size.
[5]Stabilizing ring used for fixed (FX) block; do not use for float (FL) mounting.
NOTE: Speed ratings are found in the dimension tables on pages D-37 through D-43.

Continued on next page.

INCH TAPERED BORE MOUNTING SAF225 AND SAF226 SERIES – *continued*

- The basic number for ordering complete pillow block assemblies is listed in the table below.
- Each assembly includes the housing cap and base, cap bolts, bearing, bearing adapter, locknut and lockwasher, stabilizing ring and triple-ring seals.
- If only the pillow block housing is desired, use the numbers listed in column headed Housing Only. These units include cap, base, cap bolts, triple-ring seals and stabilizing ring.
- Assemblies and pillow blocks described on this page constitute a fixed unit. To order float units, specify the part number plus the suffix float or FL.
- Assemblies shown are furnished in cast iron. If cast steel is desired, add the letter S to the alpha prefix (e.g., SAFS 22515).
- Four-bolt bases are standard on all assemblies unless as noted.
- If one end closed assembly is required, specify CL in assembly number when ordering.

Continued from previous page.

Pillow Block Assembly[1]	Shaft Dia. S-1[2]	A	B	C	D	E		F	H
						Max.	Min.		
	in.	in.	in.	in.	in.	in.	in.	in.	in.
SAF22617	2 13/16 2 7/8 **2 15/16** 3	**4 1/2**	**15 1/4**	**4 3/8**	**1 3/4**	**13 1/8**	**11 5/8**	–	**8 11/16**
FSAF22617	2 13/16 2 7/8 **2 15/16** 3	**4 1/2**	**15 1/4**	**4 3/8**	**1 3/4**	**13 1/8**	**11 5/8**	**2 3/8**	**8 11/16**
SAF22618	3 1/16 3 1/8 **3 3/16** 3 1/4	**4 3/4**	**15 1/2**	**4 3/8**	**2**	**13 1/2**	**12**	**2 1/4**	**9 3/16**
SAF22620	3 5/16 3 3/8 **3 7/16** 3 1/2	**5 1/4**	**16 1/2**	**4 3/4**	**2 1/8**	**14 1/2**	**13 1/4**	**2 3/4**	**10 1/4**
SAF22622	3 13/16 3 7/8 **3 15/16** 4	**6**	**18 3/8**	**5 1/8**	**2 3/8**	**16**	**14 5/8**	**3 1/4**	**11 9/16**
SAF22624	4 1/16 4 1/8 **4 3/16** 4 1/4	**6 5/16**	**21 1/4**	**6 1/4**	**2 1/2**	**18 1/4**	**17**	**3 3/4**	**12 1/2**
SAF22626	4 5/16 4 3/8 **4 7/16** 4 1/2	**6 11/16**	**22**	**6 1/4**	**2 5/8**	**19 1/4**	**17 3/8**	**3 3/4**	**13 5/16**
SAF22628	4 13/16 4 7/8 **4 15/16** 5	**7 1/16**	**24 3/4**	**6 3/4**	**2 3/4**	**21 5/8**	**19 3/8**	**4 1/4**	**14 9/16**

[1]Bold shaft sizes are standard. When ordering non-standard pillow block assemblies specify the shaft size.
[2]See page D-76, table D-20 for suggested shaft diameter S-1 tolerances.
[3]Includes sleeve, locknut and lockwasher. Add shaft size to order.
[4]Housing Only includes cap, base, cap bolts, triple-ring seals and stabilizing ring as required. When ordering non-standard housing only, specify the shaft size.
[5]Stabilizing ring used for fixed (FX) block; do not use for float (FL) mounting.
NOTE: Speed ratings are found in the dimension tables on pages D-37 through D-43.

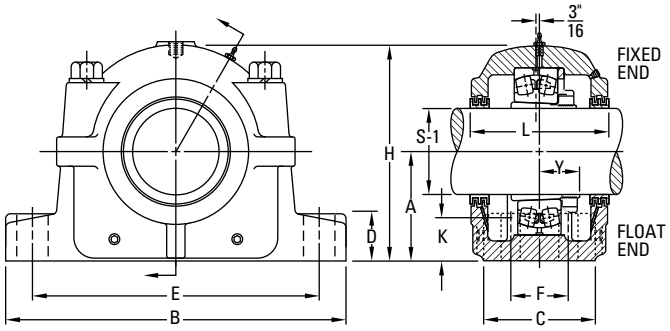

K Oil Level	L	Y	Base Bolts Required No.	 Size	Bearing No.	Adapter Assembly No.[3]	Housing Only[4]	Stabilizing Ring 1 Req'd[5]	Triple Seal 2 Req'd	Assembly Wt.
in.	in.	in.		in.						lbs.
						SNW-117 x 2 13/16			LER 182	
						SNW-117 x 2 7/8			LER 183	
1 13/16	**6 5/8**	**1 57/64**	**2**	**7/8**	**22317K**	**SNW-117 x 2 15/16**	**SAF617**	**SR-20-17**	**LER 184**	**81**
						SNW-117 x 3			LER 185	
						SNW-117 x 2 13/16			LER 182	
						SNW-117 x 2 7/8			LER 183	
1 13/16	**6 5/8**	**1 57/64**	**4**	**3/4**	**22317K**	**SNW-117 x 2 15/16**	**FSAF617**	**SR-20-17**	**LER 184**	**81**
						SNW-117 x 3			LER 185	
						SNW-118 x 3 1/16			LER 186	
						SNW-118 x 3 1/8			LER 187	
2	**7**	**2 3/64**	**4**	**3/4**	**22318K**	**SNW-118 x 3 3/16**	**SAF618**	**SR-21-18**	**LER 188**	**90**
						SNW-118 x 3 1/4			LER 189	
						SNW-120 x 3 5/16			LER 100	
						SNW-120 x 3 3/8			LER 101	
2 1/8	**7 3/8**	**2 19/64**	**4**	**3/4**	**22320K**	**SNW-120 x 3 7/16**	**SAF620**	**SR-24-20**	**LER 102**	**113**
						SNW-120 x 3 1/2			LER 103	
						SNW-122 x 3 13/16			LER 107	
						SNW-122 x 3 7/8			LER 108	
2 1/2	**8**	**2 31/64**	**4**	**7/8**	**22322K**	**SNW-122 x 3 15/16**	**SAF622**	**SR-0-22**	**LER 109**	**151**
						SNW-122 x 4			LER 110	
						SNW-124 x 4 1/16			LER 111	
						SNW-124 x 4 1/8			LER 112	
2 9/16	**8 3/8**	**2 41/64**	**4**	**1**	**22324K**	**SNW-124 x 4 3/16**	**SAF624**	**SR-0-24**	**LER 113**	**201**
						SNW-124 x 4 1/4			LER 114	
						SNW-126 x 4 5/16			LER 115	
						SNW-126 x 4 3/8			LER 116	
2 5/8	**8 3/4**	**2 27/32**	**4**	**1**	**22326K**	**SNW-126 x 4 7/16**	**SAF626**	**SR-0-26**	**LER 117**	**245**
						SNW-126 x 4 1/2			LER 118	
						SNW-126 x 4 9/16			LER 120	
						SNW-128 x 4 13/16			LER 121	
2 11/16	**9 3/8**	**3 5/64**	**4**	**1**	**22328K**	**SNW-128 x 4 7/8**	**SAF628**	**SR-0-28**	**LER 122**	**310**
						SNW-128 x 4 15/16			LER 123	

[1]Bold shaft sizes are standard. When ordering non-standard pillow block assemblies specify the shaft size.
[2]See page D-76, table D-20 for suggested shaft diameter S-1 tolerances.
[3]Includes sleeve, locknut and lockwasher. Add shaft size to order.
[4]Housing Only includes cap, base, cap bolts, triple-ring seals and stabilizing ring as required. When ordering non-standard housing only, specify the shaft size.
[5]Stabilizing ring used for fixed (FX) block; do not use for float (FL) mounting.
NOTE: Speed ratings are found in the dimension tables on pages D-37 through D-43.

Continued on next page.

INCH TAPERED BORE MOUNTING SAF225 AND SAF226 SERIES – *continued*

- The basic number for ordering complete pillow block assemblies is listed in the table below.
- Each assembly includes the housing cap and base, cap bolts, bearing, bearing adapter, locknut and lockwasher, stabilizing ring and triple-ring seals.
- If only the pillow block housing is desired, use the numbers listed in column headed Housing Only. These units include cap, base, cap bolts, triple-ring seals and stabilizing ring.
- Assemblies and pillow blocks described on this page constitute a fixed unit. To order float units, specify the part number plus the suffix float or FL.
- Assemblies shown are furnished in cast iron. If cast steel is desired, add the letter S to the alpha prefix (e.g., SAFS 22515).
- Four-bolt bases are standard on all assemblies unless as noted.
- If one end closed assembly is required, specify CL in assembly number when ordering.

Continued from previous page.

Pillow Block Assembly[1]	Shaft Dia. S-1[2]	A	B	C	D	E		F	H
						Max.	Min.		
	in.	in.	in.	in.	in.	in.	in.	in.	in.
	5 1/8								
SAF22630	**5 3/16**	**7 1/2**	**26 3/4**	**7 1/8**	**3**	**23 5/8**	**20 7/8**	**4 5/8**	**15 1/2**
	5 1/4								
	5 3/8								
SAF22632	**5 7/16**	**7 7/8**	**28**	**7 1/2**	**3 1/8**	**24 3/8**	**21 5/8**	**4 1/2**	**15 11/16**
	5 1/2								
	5 13/16								
	5 7/8								
SAF22634	**5 15/16**	**8 1/4**	**29 1/2**	**8**	**3 3/8**	**25**	**22 1/2**	**5**	**17 3/16**
	6								
SAF22636	**6 7/16**	**8 7/8**	**31 1/4**	**8 1/4**	**3 1/2**	**26 5/8**	**24**	**5 1/4**	**18 1/2**
	6 13/16								
	6 7/8								
SAF22638	**6 15/16**	**9 1/2**	**32 3/4**	**8 3/4**	**3 3/4**	**27 7/8**	**24 3/4**	**5 1/4**	**19 5/8**
	7								
	7 1/8								
SAF22640	**7 3/16**	**9 7/8**	**34 1/4**	**9**	**4**	**29 1/2**	**26 1/4**	**5 1/2**	**20 3/16**
	7 1/4								

[1]Bold shaft sizes are standard. When ordering non standard pillow block assemblies specify the shaft size.
[2]See page D-76, table D-20 for suggested shaft diameter S-1 tolerances.
[3]Includes sleeve, locknut and lockwasher. Add shaft size to order.
[4]Housing Only includes cap, base, cap bolts, triple-ring seals and stabilizing ring as required. When ordering non-standard housing only, specify the shaft size.
[5]Stabiling ring used for fixed (FX) block; do not use for float (FL) mounting.
NOTE: Speed ratings are found in the dimension tables on pages D-37 through D-43.

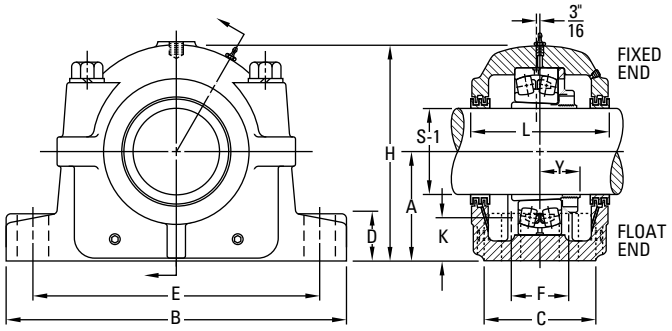

K Oil Level	L	Y	Base Bolts Required No.	 Size	Bearing No.	Adapter Assembly No.[3]	Housing Only[4]	Stabilizing Ring 1 Req'd[5]	Triple Seal 2 Req'd	Assembly Wt.
in.	in.	in.		in.						lbs.
						SNW-130 x 5 1/8			LER 124	
2 7/8	**9 11/16**	**3 17/64**	**4**	**1**	**22330K**	**SNW-130 x 5 3/16**	**SAF630**	**SR-36-30**	**LER 125**	**350**
						SNW-130 x 5 1/4			LER 126	
						SNW-132 x 5 3/8			LER 129	
2 15/16	**10 3/4**	**3 7/16**	**4**	**1 1/4**	**22332K**	**SNW-132 x 5 7/16**	**SAF632**	**SR-38-32**	**LER 130**	**420**
						SNW-132 x 5 1/2			LER 131	
						SNW-134 x 5 13/16			LER 138	
						SNW-134 x 5 7/8			LER 139	
3 1/16	**10 13/16**	**3 19/32**	**4**	**1 1/4**	**22334K**	**SNW-134 x 5 15/16**	**SAF634**	**SR-40-34**	**LER 140**	**485**
						SNW-134 x 6			LER 141	
3 3/8	**11 1/4**	**3 47/64**	**4**	**1 1/4**	**22336K**	**SNW-136 x 6 7/16**	**SAF636**	**SR-0-36**	**LER 148**	**545**
						SNW-138 x 6 13/16			LER 153	
						SNW-138 x 6 7/8			LER 154	
3 11/16	**11 1/2**	**3 57/64**	**4**	**1 1/2**	**22338K**	**SNW-138 x 6 15/16**	**SAF638**	**SR-44-38**	**LER 155**	**655**
						SNW-138 x 7			LER 156	
						SNW-140 x 7 1/8			LER 158	
3 3/4	**12 1/4**	**4 5/64**	**4**	**1 1/2**	**22340K**	**SNW-140 x 7 3/16**	**SAF640**	**SR-0-40**	**LER 159**	**725**
						SNW-140 x 7 1/4			LER 160	

[1]Bold shaft sizes are standard. When ordering non-standard pillow block assemblies specify the shaft size.
[2]See page D-76, table D-20 for suggested shaft diameter S-1 tolerances.
[3]Includes sleeve, locknut and lockwasher. Add shaft size to order.
[4]Housing Only includes cap, base, cap bolts, triple-ring seals and stabilizing ring as required. When ordering non-standard housing only, specify the shaft size.
[5]Stabilizing ring used for fixed (FX) block; do not use for float (FL) mounting.
NOTE: Speed ratings are found in the dimension tables on pages D-37 through D-43.

INCH TAPERED BORE MOUNTING SDAF225 AND SDAF226 SERIES

- Each assembly includes the housing cap and base, cap bolts, bearing, bearing adapter, locknut and lockwasher, stabilizing ring and triple-ring seals.
- To order pillow block housing only, use the number listed in the Housing Only column. These units include cap, base, cap bolts, triple-ring seals and stabilizing ring.
- Assemblies and pillow blocks described on this page constitute fixed units.
- To order float units, specify the part number plus the suffix float or FL.
- Assemblies shown are furnished in cast iron. If cast steel is desired, add the letter S to the alpha prefix (e.g., SDAFS 22515).

Pillow Block Assembly[1]	Shaft Dia. S-1[2]	A	B	C	D	E		F	H
						Max.	Min.		
	in.	in.	in.	in.	in.	in.	in.	in.	in.
SERIES SDAF225									
	3 3/8								
SDAF22520	**3 7/16**	**4 1/2**	**15 1/4**	**6**	**1 7/8**	**13 1/8**	**11 5/8**	**3 3/8**	**8 15/16**
	3 1/2								
	3 13/16								
	3 7/8								
SDAF22522	**3 15/16**	**4 15/16**	**16 1/2**	**6 3/4**	**2 1/8**	**14 1/2**	**12 5/8**	**4**	**9 7/8**
	4								
	4 1/16								
	4 1/8								
SDAF22524	**4 3/16**	**5 1/4**	**16 1/2**	**6 7/8**	**2 1/4**	**14 1/2**	**13 1/4**	**4 1/8**	**10 1/2**
	4 1/4								
	4 5/16								
	4 3/8								
SDAF22526	**4 7/16**	**6**	**18 3/8**	**7 1/2**	**2 3/8**	**16**	**14 5/8**	**4 1/2**	**11 7/8**
	4 1/2								
	4 13/16								
	4 7/8								
SDAF22528	**4 15/16**	**6**	**20 1/8**	**7 1/2**	**2 3/8**	**17 1/8**	**16**	**4 1/2**	**12 1/16**
	5								
	5 1/8								
SDAF22530	**5 3/16**	**6 5/16**	**21 1/4**	**7 7/8**	**2 1/2**	**18 1/4**	**17**	**4 3/4**	**12 13/16**
	5 1/4								
	5 3/8								
SDAF22532	**5 7/16**	**6 11/16**	**22**	**8 1/4**	**2 1/2**	**19 1/4**	**17 3/8**	**5**	**13 11/16**
	5 1/2								
SDAF22534	**5 15/16**	**7 1/16**	**24 3/4**	**9**	**2 1/2**	**21 5/8**	**19 3/8**	**5 1/2**	**14 1/4**
	6 5/16								
	6 3/8								
SDAF22536	**6 7/16**	**7 1/2**	**26 3/4**	**9 3/8**	**2 3/4**	**23 5/8**	**20 7/8**	**5 7/8**	**15 3/16**
	6 1/2								
SDAF22538	**6 15/16**	**7 7/8**	**27 5/8**	**10**	**3**	**23 1/2**	**21 1/2**	**6 1/4**	**16 1/4**
SDAF22540	**7 3/16**	**8 1/4**	**28 3/4**	**10 1/2**	**3 1/4**	**25**	**23**	**6 3/4**	**17 1/8**
SDAF22544	**7 15/16**	**9 1/2**	**32**	**11 1/4**	**3 1/2**	**27 7/8**	**25 5/8**	**7 1/4**	**19 1/4**

[1]Bold shaft sizes are standard. When ordering non-standard pillow block assemblies, specify the shaft size.
[2]See page D-76, table D-20 for suggested shaft diameter S-1 tolerances.
[3]Includes sleeve, locknut and lockwasher. Add shaft size to order.
[4]Housing Only includes cap, base, cap bolts, triple-ring seals and stabilizing ring as required. When ordering non-standard housing only specify the shaft size.
[5]Stabilizing ring used for fixed (FX) block; do not use for float (FL) mounting.
NOTE: Speed ratings are found in the dimension tables on pages D-37 through D-43.

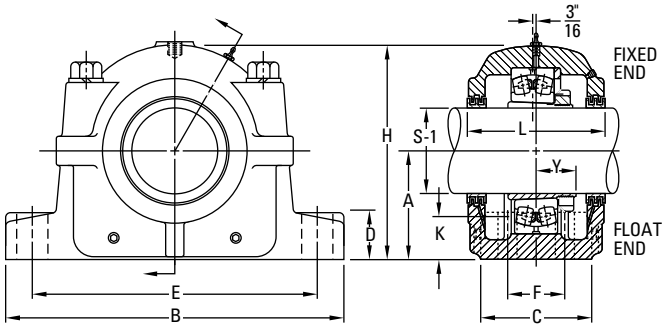

K Oil Level	L	Y	Base Bolts Required No.	Base Bolts Required Size	Bearing No.	Adapter Assembly No.[3]	Housing Only[4]	Stabilizing Ring 1 Req'd[5]	Triple Seal 2 Req'd	Assembly Wt.
in.	in.	in.		in.						lbs.
1 3/4	**6 3/4**	**1 49/64**	**4**	**3/4**	**22220K**	SNW-20 x 3 3/8 **SNW-20 x 3 7/16** SNW-20 x 3 1/2	**SDAF520**	**SR-20-17**	LER 74 **LER 75** LER 76	**81**
1 7/8	**7 1/4**	**1 61/64**	**4**	**7/8**	**22222K**	SNW-22 x 3 13/16 SNW-22 x 3 7/8 **SNW-22 x 3 15/16** SNW-22 x 4	**SDAF522**	**SR-22-19**	LER 91 LER 92 **LER 93** LER 94	**94**
1 15/16	**7 3/8**	**2 3/32**	**4**	**7/8**	**22224K**	SNW-24 x 4 1/16 SNW-24 x 4 1/8 **SNW-24 x 4 3/16** SNW-24 x 4 1/4	**SDAF524**	**SR-24-20**	LER 111 LER 112 **LER 113** LER 114	**137**
2 7/16	**8**	**2 17/64**	**4**	**1**	**22226K**	SNW-26 x 4 5/16 SNW-26 x 4 3/8 **SNW-26 x 4 7/16** SNW-26 x 4 1/2	**SDAF526**	**SR-26-0**	LER 115 LER 116 **LER 117** LER 118	**159**
2 1/8	**7 13/16**	**2 13/32**	**4**	**1 1/8**	**22228K**	SNW-28 x 4 13/16 SNW-28 x 4 7/8 **SNW-28 x 4 15/16** SNW-28 x 5	**SDAF528**	**SR-28-0**	LER 120 LER 121 **LER 122** LER 123	**189**
2 3/16	**8 3/8**	**2 37/64**	**4**	**1 1/8**	**22230K**	SNW-30 x 5 1/8 **SNW-30 x 5 3/16** SNW-30 x 5 1/4	**SDAF530**	**SR-30-0**	LER 124 **LER 125** LER 126	**225**
2 3/16	**8 3/4**	**2 49/64**	**4**	**1 1/8**	**22232K**	SNW-32 x 5 3/8 **SNW-32 x 5 7/16** SNW-32 x 5 1/2	**SDAF532**	**SR-32-0**	LER 129 **LER 130** LER 131	**300**
2 5/16	**9 5/8**	**2 59/64**	**4**	**1 1/4**	**22234K**	**SNW-34 x 5 15/16**	**SDAF534**	**SR-34-0**	**LER 140**	**310**
2 9/16	**10**	**2 61/64**	**4**	**1 1/4**	**22236K**	SNW-36 x 6 5/16 SNW-36 x 6 3/8 **SNW-36 x 6 7/16** SNW-36 x 6 1/2	**SDAF536**	**SR-36-30**	LER 146 LER 147 **LER 148** LER 149	**350**
2 5/8	**10 5/8**	**3 7/64**	**4**	**1 3/8**	**22238K**	**SNW-38 x 6 15/16**	**SDAF538**	**SR-38-32**	**LER 224**	**420**
2 11/16	**11 1/8**	**3 9/32**	**4**	**1 3/8**	**22240K**	**SNW-40 x 7 3/16**	**SDAF540**	**SR-40-34**	**LER 228**	**545**
3 3/8	**11 7/8**	**3 17/32**	**4**	**1 1/2**	**22244K**	**SNW-44 x 7 15/16**	**SDAF544**	**SR-44-38**	**LER 236**	**665**

[1]Bold shaft sizes are standard. When ordering non-standard pillow block assemblies, specify the shaft size.
[2]See page D-76, table D-20 for suggested shaft diameter S-1 tolerances.
[3]Includes sleeve, locknut and lockwasher. Add shaft size to order.
[4]Housing Only includes cap, base, cap bolts, triple-ring seals and stabilizing ring as required. When ordering non-standard housing only specify the shaft size.
[5]Stabilizing ring used for fixed (FX) block; do not use for float (FL) mounting.
NOTE: Speed ratings are found in the dimension tables on pages D-37 through D-43.

Continued on next page.

INCH TAPERED BORE MOUNTING SDAF225 AND SDAF226 SERIES – *continued*

- Each assembly includes the housing cap and base, cap bolts, bearing, bearing adapter, locknut and lockwasher, stabilizing ring and triple-ring seals.
- To order pillow block housing only, use the number listed in the Housing Only column. These units include cap, base, cap bolts, triple-ring seals and stabilizing ring.
- Assemblies and pillow blocks described on this page constitute fixed units.
- To order float units, specify the part number plus the suffix float or FL.
- Assemblies shown are furnished in cast iron. If cast steel is desired, add the letter S to the alpha prefix (e.g., SAFS 22515).

Continued from previous page.

Pillow Block Assembly[1]	Shaft Dia. S-1[2]	A	B	C	D	E		F	H
						Max.	Min.		
	in.	in.	in.	in.	in.	in.	in.	in.	in.
SERIES SDAF226									
SDAF22617	2 7/8 **2 15/16** 3	**4 1/2**	**15 1/4**	**6**	**1 7/8**	**13 1/8**	**11 5/8**	**3 3/8**	**8 15/16**
SDAF22618	3 1/16 3 1/8 **3 3/16** 3 1/4	**4 3/4**	**15 1/2**	**6 1/8**	**2**	**13 1/2**	**12**	**3 5/8**	**9 7/16**
SDAF22620	3 5/16 3 3/8 **3 7/16** 3 1/2	**5 1/4**	**16 1/2**	**6 7/8**	**2 1/4**	**14 1/2**	**13 1/4**	**4 1/8**	**10 1/2**
SDAF22622	3 13/16 3 7/8 **3 15/16** 4	**6**	**18 3/8**	**7 1/2**	**2 3/8**	**16**	**14 5/8**	**4 1/2**	**11 7/8**
SDAF22624	4 1/16 4 1/8 **4 3/16** 4 1/4	**6 5/16**	**21 1/4**	**7 7/8**	**2 1/2**	**18 1/4**	**17**	**4 3/4**	**12 13/16**
SDAF22626	4 5/16 4 3/8 **4 7/16** 4 1/2 4 9/16	**6 11/16**	**22**	**8 1/4**	**2 1/2**	**19 1/4**	**17 3/8**	**5**	**13 11/16**
SDAF22628	**4 15/16**	**7 1/16**	**24 3/4**	**9**	**2 1/2**	**21 5/8**	**19 3/8**	**5 1/2**	**14 1/4**
SDAF22630	5 1/8 **5 3/16** 5 1/4 5 3/8 5 5/16	**7 1/2**	**26 3/4**	**9 3/8**	**2 3/4**	**23 5/8**	**20 7/8**	**5 7/8**	**15 3/16**
SDAF22632	**5 7/16**	**7 7/8**	**27 5/8**	**10**	**3**	**23 1/2**	**21 1/2**	**6 1/4**	**16 1/4**
SDAF22634	**5 15/16**	**8 1/4**	**28 3/4**	**10 1/2**	**3 1/4**	**25**	**23**	**6 3/4**	**17 1/8**
SDAF22636	**6 7/16**	**8 7/8**	**30 1/2**	**10 3/4**	**3 1/4**	**26 3/8**	**24 1/8**	**6 7/8**	**17 15/16**
SDAF22638	**6 15/16**	**9 1/2**	**32**	**11 1/4**	**3 1/2**	**27 7/8**	**25 5/8**	**7 1/4**	**19 1/4**
SDAF22640	**7 3/16**	**9 7/8**	**33 1/2**	**11 3/4**	**3 1/2**	**29 1/4**	**26 5/8**	**7 5/8**	**19 15/16**

[1]Bold shaft sizes are standard. When ordering non-standard pillow block assemblies, specify the shaft size.
[2]See page D-76, table D-20 for suggested shaft diameter S-1 tolerances.
[3]Includes sleeve, locknut and lockwasher. Add shaft size to order.
[4]Housing Only includes cap, base, cap bolts, triple-ring seals and stabilizing ring as required. When ordering non-standard housing only specify the shaft size.
[5]Stabilizing ring used for fixed (FX) block; do not use for float (FL) mounting.
NOTE: Speed ratings are found in the dimension tables on pages D-37 through D-43.

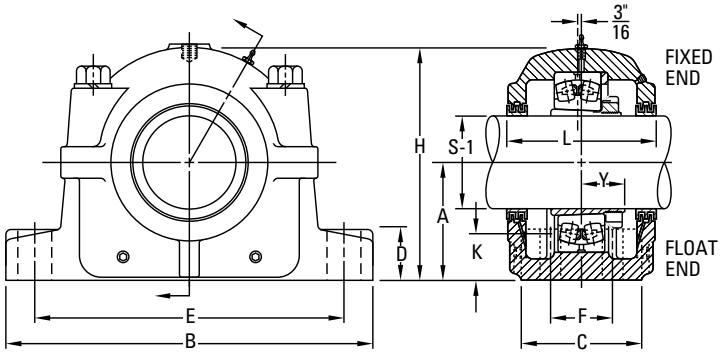

K Oil Level	L	Y	Base Bolts Required No.	Base Bolts Required Size	Bearing No.	Adapter Assembly No.[3]	Housing Only[4]	Stabilizing Ring 1 Req'd[5]	Triple Seal 2 Req'd	Assembly Wt.
in.	in.	in.		in.						lbs.
1 13/16	6 3/4	1 57/64	4	3/4	22317K	SNW-117 x 2 7/8 **SNW-117 x 2 15/16** SNW-117 x 3	SDAF617	SR-20-17	LER 58 **LER 59** LER 60	94
2	6 7/8	2 3/64	4	3/4	22318K	SNW-118 x 3 1/16 SNW-118 x 3 1/8 **SNW-118 x 3 3/16** SNW-118 x 3 1/4	SDAF618	SR-21-18	LER 67 LER 68 **LER 69** LER 70	137
2 1/8	7 3/8	2 19/64	4	7/8	22320K	SNW-120 x 3 5/16 SNW-120 x 3 3/8 **SNW-120 x 3 7/16** SNW-120 x 3 1/2	SDAF620	SR-24-20	LER 73 LER 74 **LER 75** LER 76	159
2 1/2	8	2 31/64	4	1	22322K	SNW-122 x 3 13/16 SNW-122 x 3 7/8 **SNW-122 x 3 15/16** SNW-122 x 4	SDAF622	SR-0-22	LER 91 LER 92 **LER 93** LER 94	189
2 9/16	8 3/8	2 41/64	4	1 1/8	22324K	SNW-124 x 4 1/16 SNW-124 x 4 1/8 **SNW-124 x 4 3/16** SNW-124 x 4 1/4	SDAF624	SR-0-24	LER 111 LER 112 **LER 113** LER 114	225
2 5/8	8 3/4	2 27/64	4	1 1/8	22326K	SNW-126 x 4 5/16 SNW-126 x 4 3/8 **SNW-126 x 4 7/16** SNW-126 x 4 1/2 SNW-126 x 4 9/16	SDAF626	SR-0-26	LER 115 LER 116 **LER 117** LER 118 LER 119	300
2 11/16	9 5/8	3 5/64	4	1 1/8	22328K	**SNW-128 x 4 15/16**	SDAF628	SR-0-28	**LER 122**	310
2 7/8	9 3/4	3 17/64	4	1 1/4	22330K	SNW-130 x 5 1/8 **SNW-130 x 5 3/16** SNW-130 x 5 1/4 SNW-130 x 5 5/16 SNW-130 x 5 3/8	SDAF630	SR-36-30	LER 124 **LER 125** LER 126 LER 128 LER 127	395
2 15/16	10 5/8	3 7/16	4	1 3/8	22332K	**SNW-132 x 5 7/16**	SDAF632	SR-38-32	**LER 211**	420
3 1/16	11 1/8	3 19/32	4	1 3/8	22334K	**SNW-134 x 5 15/16**	SDAF634	SR-40-34	**LER 215**	525
3 7/8	11 3/8	3 47/64	4	1 1/2	22336K	**SNW-136 x 6 7/16**	SDAF636	SR-0-36	**LER 220**	645
3 11/16	11 13/16	4 57/64	4	1 1/2	22338K	**SNW-138 x 6 15/16**	SDAF638	SR-44-38	**LER 224**	705
3 3/4	12 1/4	4 5/64	4	1 5/8	22340K	**SNW-140 x 7 3/16**	SDAF640	SR-0-40	**LER 228**	825

[1]Bold shaft sizes are standard. When ordering non-standard pillow block assemblies, specify the shaft size.
[2]See page D-76, table D-20 for suggested shaft diameter S-1 tolerances.
[3]Includes sleeve, locknut and lockwasher. Add shaft size to order.
[4]Housing Only includes cap, base, cap bolts, triple-ring seals and stabilizing ring as required. When ordering non-standard housing only specify the shaft size.
[5]Stabilizing ring used for fixed (FX) block; do not use for float (FL) mounting.
NOTE: Speed ratings are found in the dimension tables on pages D-37 through D-43.

INCH TAPERED BORE MOUNTING SAF230K, SDAF230K SERIES

- Each assembly includes the housing cap and base, cap bolts, bearing, bearing adapter, locknut and lockwasher, stabilizing ring and triple-ring seals.
- If only the pillow block is desired, use the numbers listed in the Housing Only column. These units include cap and base, cap bolts, triple-ring seals and stabilizing ring.
- Assembly and pillow blocks described on this page constitute fixed units.
- To order float units, specify the part number plus the suffix float or FL.
- All assemblies shown are furnished in cast iron. If cast steel is desired, add the letter S to the alpha prefix (e.g., SAFS 23024).
- Please note that for applications SAF23048 and larger, the shaft size must be included in the part description when ordering (e.g., SAF23048-8 15/16).
- Two stabilizing rings are supplied with housings SAF048 through SAF056 and SDAF060K through SDAF076K. For fixed applications both rings must be used. Do not use stabilizing rings for float mounting.

Pillow Block Assembly[1]	Shaft Dia. S-1[2]	A	B	C	D	E		F	H	K
						Max.	Min.			Oil Level
	in.	in.	in.	in.	in.	in.	in.	in.	in.	in.
SERIES SAF230K										
SAF23024K	4 1/16 4 1/8 **4 3/16** 4 1/4	**4 1/2**	**15 1/4**	**4 3/8**	**1 3/4**	**13 1/8**	**11 5/8**	**2 3/8**	**8 11/16**	**1 9/16**
SAF23026K	4 5/16 4 3/8 **4 7/16** 4 1/2	**4 15/16**	**16 1/2**	**4 3/4**	**2**	**14 1/2**	**12 5/8**	**2 3/4**	**9 9/16**	**1 11/16**
SAF23028K	4 13/16 4 7/8 **4 15/16** 5	**5 1/4**	**16 1/2**	**4 3/4**	**2 1/8**	**14 1/2**	**13 1/4**	**2 3/4**	**10 1/4**	**1 13/16**
SAF23030K	5 1/8 **5 3/16** 5 1/4	**6**	**18 3/8**	**5 1/8**	**2 3/8**	**16**	**14 5/8**	**3 1/4**	**11 9/16**	**2 5/16**
SAF23032K	5 3/8 **5 7/16** 5 1/2	**6**	**18 3/8**	**5 1/8**	**2 3/8**	**16**	**14 5/8**	**3 1/4**	**11 9/16**	**2 1/16**
SAF23034K	5 13/16 5 7/8 **5 15/16** 6	**6**	**20 1/8**	**5 7/8**	**2 3/8**	**17 1/8**	**16**	**3 3/8**	**11 3/4**	**1 3/4**
SAF23036K	6 5/16 6 3/8 **6 7/16** 6 1/2	**6 11/16**	**22**	**6 1/4**	**2 5/8**	**19 1/4**	**17 3/8**	**3 3/4**	**13 5/16**	**2 3/16**
SAF23038K	6 13/16 6 7/8 **6 15/16** 7	**6 11/16**	**22**	**6 1/4**	**2 5/8**	**19 1/4**	**17 3/8**	**3 3/4**	**13 5/16**	**1 15/16**
SAF23040K	7 1/8 **7 3/16** 7 1/4	**7 1/16**	**24 3/4**	**6 3/4**	**2 3/4**	**21 5/8**	**19 3/8**	**4 1/4**	**14 9/16**	**2 13/16**
SAF23044K	7 13/16 7 7/8 **7 15/16** 8	**7 7/8**	**28**	**7 1/2**	**3 1/8**	**24 3/8**	**21 5/8**	**4 1/2**	**15 11/16**	**2 3/8**

[1]Bold shaft sizes are standard. When ordering non-standard pillow block assemblies, specify shaft size.
[2]See page D-76, table D-20 for suggested shaft diameter S-1 tolerances.
[3]Includes sleeve, locknut and lockwasher. Add shaft size to order.
[4]Housing Only includes cap, base, cap bolts, triple-ring seals and stabilizing ring as required. When ordering non-standard housing only specify the shaft size.
[5]Stabilizing ring used for fixed (FX) block; do not use for float (FL) mounting.
NOTE: Speed ratings are found in the dimension tables on pages D-37 through D-43.

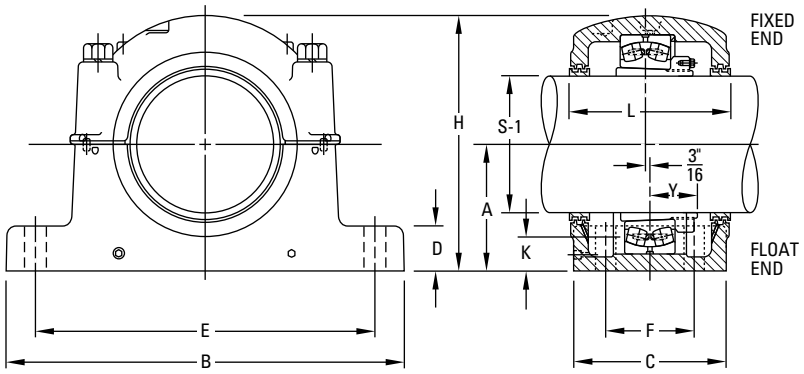

L	Y	Base Bolts 4 Req'd	Bearing No.	Adapter Assembly No.[3]	Housing Only[4]	Stabilizing Ring 1 Req'd[5]	Triple Seal 2 Req'd	Assembly Wt.
in.	in.	in.						lbs.
				SNW-3024 x 4 1/16			LER 111	
				SNW-3024 x 4 1/8			LER 112	
6	**1 55/64**	**3/4**	**23024K**	**SNW-3024 x 4 3/16**	**SAF024K**	**SR-20-17**	**LER 113**	**60**
				SNW-3024 x 4 1/4			LER 114	
				SNW-3026 x 4 5/16			LER 115	
				SNW-3026 x 4 3/8			LER 116	
6 3/8	**2 1/32**	**3/4**	**23026K**	**SNW-3026 x 4 7/16**	**SAF026K**	**SR-22-19**	**LER 117**	**76**
				SNW-3026 x 4 1/2			LER 118	
				SNW-3028 x 4 13/16			LER 120	
				SNW-3028 x 4 7/8			LER 121	
7 3/8	**2 1/8**	**3/4**	**23028K**	**SNW-3028 x 4 15/16**	**SAF028K**	**SR- 0-20**	**LER 122**	**90**
				SNW-3028 x 5			LER 123	
				SNW-3030 x 5 1/8			LER 124	
8	**2 13/64**	**7/8**	**23030K**	**SNW-3030 x 5 3/16**	**SAF030K**	**SR- 0-21**	**LER 125**	**125**
				SNW-3030 x 5 1/4			LER 126	
				SNW-3032 x 5 3/8			LER 129	
8	**2 11/32**	**7/8**	**23032K**	**SNW-3032 x 5 7/16**	**SAF032K**	**SR- 0-22**	**LER 130**	**132**
				SNW-3032 x 5 1/2			LER 131	
				SNW-3034 x 5 13/16			LER 138	
				SNW-3034 x 5 7/8			LER 139	
7 3/4	**2 33/64**	**1**	**23034K**	**SNW-3034 x 5 15/16**	**SAF034K**	**SR- 0-24**	**LER 140**	**154**
				SNW-3034 x 6			LER 141	
				SNW-3036 x 6 5/16			LER 146	
				SNW-3036 x 6 3/8			LER 147	
8 3/4	**2 11/16**	**1**	**23036K**	**SNW-3036 x 6 7/16**	**SAF036K**	**SR- 0-26**	**LER 148**	**212**
				SNW-3036 x 6 1/2			LER 149	
				SNW-3038 x 6 13/16			LER 153	
				SNW-3038 x 6 7/8			LER 154	
8 3/4	**2 47/64**	**1**	**23038K**	**SNW-3038 x 6 15/16**	**SAF038K**	**SR-32- 0**	**LER 155**	**220**
				SNW-3038 x 7			LER 156	
				SNW-3040 x 7 1/8			LER 158	
9 3/8	**2 15/16**	**1**	**23040K**	**SNW-3040 x 7 3/16**	**SAF040K**	**SR-34- 0**	**LER 159**	**295**
				SNW-3040 x 7 1/4			LER 160	
				SNW-3044 x 7 13/16			LER 165	
				SNW-3044 x 7 7/8			LER 166	
10 3/4	**3 5/32**	**1 1/4**	**23044K**	**SNW-3044 x 7 15/16**	**SAF044K**	**SR-38-32**	**LER 167**	**370**
				SNW-3044 x 8			LER 168	

[1]Bold shaft sizes are standard. When ordering non-standard pillow block assemblies, specify shaft size.
[2]See page D-76, table D-20 for suggested shaft diameter S-1 tolerances.
[3]Includes sleeve, locknut and lockwasher. Add shaft size to order.
[4]Housing Only includes cap, base, cap bolts, triple-ring seals and stabilizing ring as required. When ordering non-standard housing only specify the shaft size.
[5]Stabilizing ring used for fixed (FX) block; do not use for float (FL) mounting.
NOTE: Speed ratings are found in the dimension tables on pages D-37 through D-43.

Continued on next page.

INCH TAPERED BORE MOUNTING SAF230K, SDAF230K SERIES – continued

- Each assembly includes the housing cap and base, cap bolts, bearing, bearing adapter, locknut and lockwasher, stabilizing ring and triple-ring seals.
- If only the pillow block is desired, use the numbers listed in the Housing Only column. These units include cap and base, cap bolts, triple-ring seals and stabilizing ring.
- Assembly and pillow blocks described on this page constitute fixed units.
- To order float units, specify the part number plus the suffix float or FL.
- All assemblies shown are furnished in cast iron. If cast steel is desired, add the letter S to the alpha prefix (e.g., SAFS 23024).
- Please note that for applications SAF23048 and larger, the shaft size must be included in the part description when ordering (e.g., SAF23048-8 15/16).
- Two stabilizing rings are supplied with housings SAF048 through SAF056 and SDAF060K through SDAF076K. For fixed applications both rings must be used. Do not use stabilizing rings for float mounting.

Continued from previous page.

Pillow Block Assembly[1]	Shaft Dia. S-1[2]	A	B	C	D	E		F	H	K
						Max.	Min.			Oil Level
	in.	in.	in.	in.	in.	in.	in.	in.	in.	in.
SAF23048K-8 7/16	8 7/16	8 1/4	29 1/2	8	3 3/8	25	22 1/2	5	17 3/16	2 1/4
SAF23048K-8 1/2	8 1/2	8 1/4	29 1/2	8	3 3/8	25	22 1/2	5	17 3/16	2 1/4
SAF23048K-8 15/16	8 15/16	8 1/4	29 1/2	8	3 3/8	25	22 1/2	5	17 3/16	2 1/4
SAF23048K-9	9	8 1/4	29 1/2	8	3 3/8	25	22 1/2	5	17 3/16	2 1/4
SAF23052K-9 7/16	9 7/16	9 1/2	32 3/4	8 3/4	3 3/4	27 7/8	24 3/4	5 1/4	19 7/16	2 15/16
SAF23052K-9 1/2	9 1/2	9 1/2	32 3/4	8 3/4	3 3/4	27 7/8	24 3/4	5 1/4	19 7/16	2 15/16
SAF23056K-9 15/16	9 15/16	9 7/8	34 1/4	9	4	29 1/2	26 1/4	5 1/2	20 3/16	2 15/16
SAF23056K-10	10	9 7/8	34 1/4	9	4	29 1/2	26 1/4	5 1/2	20 3/16	2 15/16
SAF23056K-10 7/16	10 7/16	9 7/8	34 1/4	9	4	29 1/2	26 1/4	5 1/2	20 3/16	2 15/16
SAF23056K-10 1/2	10 1/2	9 7/8	34 1/4	9	4	29 1/2	26 1/4	5 1/2	20 3/16	2 15/16
SERIES SDAF230K										
SDAF23060K-10 15/16	10 15/16	12	38 1/4	14 3/4	3 1/2	33 1/2	32 3/4	9	23 7/16	4 7/16
SDAF23060K-11	11	12	38 1/4	14 3/4	3 1/2	33 1/2	32 3/4	9	23 7/16	4 7/16
SDAF23064K-11 7/16	11 7/16	12	38 1/4	14 3/4	3 1/2	33 1/2	32 3/4	9	23 7/16	4 1/16
SDAF23064K-11 1/2	11 1/2	12	38 1/4	14 3/4	3 1/2	33 1/2	32 3/4	9	23 7/16	4 1/16
SDAF23064K-11 15/16	11 15/16	12	38 1/4	14 3/4	3 1/2	33 1/2	32 3/4	9	23 7/16	4 1/16
SDAF23064K-12	12	12	38 1/4	14 3/4	3 1/2	33 1/2	32 3/4	9	23 7/16	4 1/16
SDAF23068K-12 7/16	12 7/16	12	39	15 1/4	4 3/16	33 1/2	32	10	24	3 7/16
SDAF23068K-12 1/2	12 1/2	12	39	15 1/4	4 3/16	33 1/2	32	10	24	3 7/16
SDAF23072K-12 15/16	12 15/16	12 13/16	41 3/4	15 3/4	4 1/2	36 1/2	35	10 1/2	26	3 7/8
SDAF23072K-13	13	12 13/16	41 3/4	15 3/4	4 1/2	36 1/2	35	10 1/2	26	3 7/8
SDAF23072K-13 7/16	13 7/16	12 13/16	41 3/4	15 3/4	4 1/2	36 1/2	35	10 1/2	26	3 7/8
SDAF23072K-13 1/2	13 1/2	12 13/16	41 3/4	15 3/4	4 1/2	36 1/2	35	10 1/2	26	3 7/8
SDAF23076K-13 15/16	13 15/16	12 13/16	41 3/4	15 3/4	4 1/2	36 1/2	35	10 1/2	26	3 7/16
SDAF23076K-14	14	12 13/16	41 3/4	15 3/4	4 1/2	36 1/2	35	10 1/2	26	3 7/16
SDAF23080K-15	15	14 1/2	46	17 1/8	5 1/4	40 3/4	39 1/4	11	29	4 7/16
SDAF23084K-15 3/4	15 3/4	14 1/2	46	17 1/8	5 1/4	40 3/4	39 1/4	11	29	4 1/16
SDAF23088K-16 1/2	16 1/2	15 1/2	48 3/4	18 3/4	5 1/2	43 1/2	41 3/4	12 1/4	30 1/2	4 1/2
SDAF23092K-17	17	15 1/2	48 3/4	18 3/4	5 1/2	43 1/2	41 3/4	12 1/4	30 1/2	4
SDAF23096K-18	18	17	53	21	5 1/2	46 1/8	44 3/8	14 1/2	33 3/4	5 1/8
SDAF230/530K-18 1/2	18 1/2	17	53	21	5 1/2	46 1/8	44 3/8	14 1/2	33 3/4	4 3/4
SDAF230/530K-19 1/2	19 1/2	18	54 1/4	21 5/8	5 3/4	48 7/8	47 1/8	15	35 3/4	4 13/16

[1]Bold shaft sizes are standard. When ordering non-standard pillow block assemblies, specify shaft size.
[2]See page D-76, table D-20 for suggested shaft diameter S-1 tolerances.
[3]Includes sleeve, locknut and lockwasher. Add shaft size to order.
[4]Housing Only includes cap, base, cap bolts, triple-ring seals and stabilizing ring as required. When ordering non-standard housing only specify the shaft size.
[5]Stabilizing ring used for fixed (FX) block; do not use for float (FL) mounting.
NOTE: Speed ratings are found in the dimension tables on pages D-37 through D-43.

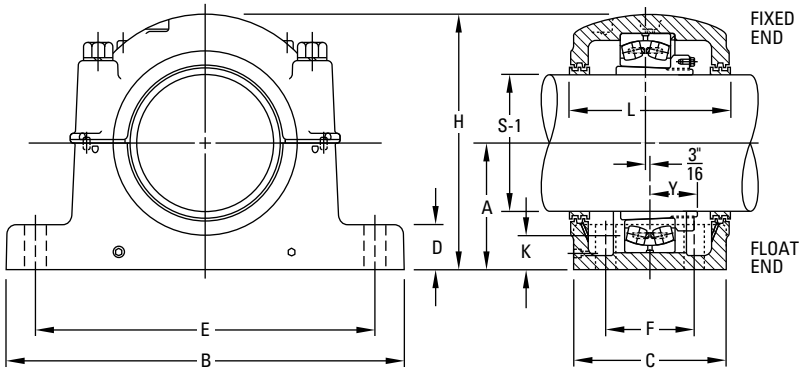

L	Y	Base Bolts 4 Req'd	Bearing No.	Adapter Assembly No.[3]	Housing Only[4]	Stabilizing Ring 1 Req'd[5]	Triple Seal 2 Req'd	Assembly Wt.
in.	in.	in.						lbs.
11 1/8	3 17/32	1 1/4	23048K	SNP-3048 x 8 7/16	SAF048K-8 7/16	A8897	LER 526	430
11 1/8	3 17/32	1 1/4	23048K	SNP-3048 x 8 1/2	SAF048K-8 1/2	A8897	LER 527	428
11 1/8	3 17/32	1 1/4	23048K	SNP-3048 x 8 15/16	SAF048K-8 15/16	A8897	LER 529	422
11 1/8	3 17/32	1 1/4	23048K	SNP-3048 x 9	SAF048K-9	A8897	LER 530	420
11 7/8	3 53/64	1 1/2	23052K	SNP-3052 x 9 7/16	SAF052K-9 7/16	A8898	LER 178-1	587
11 7/8	3 53/64	1 1/2	23052K	SNP-3052 x 9 1/2	SAF052K-9 1/2	A8898	LER 178	585
12 1/16	3 61/64	1 1/2	23056K	SNP-3056 x 10	SAF056K-9 15/16	A8819	ER 751	640
12 1/16	3 61/64	1 1/2	23056K	SNP-3056 x 10 7/16	SAF056K-10	A8819	ER705	635
12 1/16	3 61/64	1 1/2	23056K	SNP-3056 x 10 1/2	SAF056K-10 7/16	A8819	ER 745	625
12 1/16	3 61/64	1 1/2	23056K	SNP-3056 x 9 15/16	SAF056K-10 1/2	A8819	ER 710	620
15 1/2	4 9/32	1 5/8	23060K	SNP-3060 x 10 15/16	SDAF060K-10 15/16	A8967	ER 858	1175
15 1/2	4 9/32	1 5/8	23060K	SNP-3060 x 11	SDAF060K-11	A8967	ER 825	1174
15 1/2	4 7/16	1 5/8	23064K	SNP-3064 x 11 7/16	SDAF064K-11 7/16	A8968	ER 861	1275
15 1/2	4 7/16	1 5/8	23064K	SNP-3064 x 11 1/2	SDAF064K-11 1/2	A8968	ER 832	1274
15 1/2	4 7/16	1 5/8	23064K	SNP-3064 x 11 15/16	SDAF064K-11 15/16	A8968	ER 859	1269
15 1/2	4 7/16	1 5/8	23064K	SNP-3064 x 12	SDAF064K-12	A8968	ER 818	1268
15 3/4	4 13/16	1 7/8	23068K	SNP-3068 x 12 7/16	SDAF068K-12 7/16	A8969	ER 865	1553
15 3/4	4 13/16	1 7/8	23068K	SNP-3068 x 12 1/2	SDAF068K-12 1/2	A8969	ER 866	1552
16 1/4	4 53/64	1 7/8	23072K	SNP-3072 x 12 15/16	SDAF072K-12 15/16	A8970	ER 869	1632
16 1/4	4 53/64	1 7/8	23072K	SNP-3072 x 13	SDAF072K-13	A8970	ER 846	1630
16 1/4	4 53/64	1 7/8	23072K	SNP-3072 x 13 7/16	SDAF072K-13 7/16	A8970	ER 872	1614
16 1/4	4 53/64	1 7/8	23072K	SNP-3072 x 13 1/2	SDAF072K-13 1/2	A8970	ER 823	1610
16 1/4	5 1/16	1 7/8	23076K	SNP-3076 x 13 15/16	SDAF076K-13 15/16	A8971	ER 875	1687
16 1/4	5 1/16	1 7/8	23076K	SNP-3076 x 14	SDAF076K-14	A8971	ER 876	1685
17 5/8	5 17/32	4, 2	23080K	SNP-3080 x 15	SDAF080K-15	A8974	ER 847	2300
17 5/8	5 9/16	4, 2	23087K	SNP-3084 x 15 3/4	SDAF084K-15 3/4	A8978	ER 885	2300
19 1/4	5 3/4	4, 2 1/4	230994K	SNP-3088 x 16 1/2	SDAF3088K-16 1/2	A8979	ER 958	2550
19 1/4	5 7/8	4, 2 1/4	23082K	SNP-3092 x 17	SDAF3092K-17	A8980	ER 838	2850
21 3/4	5 29/32	4, 2 1/4	23096K	SNP-3096 x 18	SDAF3096K-18	A8984	ER 888	4250
21 3/4	6 1/2	4, 2 1/4	230/500K	SNP-30-500 x 18 1/2	SDAF30-500K-18 1/2	A8976	ER 978	4350
22 1/4	6 27/32	4, 2 1/2	230/530/K	SNP-30-530 x 19 1/2	SDAF 30-530K-19 1/2		ER 926	5200

[1]Bold shaft sizes are standard. When ordering non-standard pillow block assemblies, specify shaft size.
[2]See page D-76, table D-20 for suggested shaft diameter S-1 tolerances.
[3]Includes sleeve, locknut and lockwasher. Add shaft size to order.
[4]Housing Only includes cap, base, cap bolts, triple-ring seals and stabilizing ring as required. When ordering non-standard housing only specify the shaft size.
[5]Stabilizing ring used for fixed (FX) block; do not use for float (FL) mounting.
NOTE: Speed ratings are found in the dimension tables on pages D-37 through D-43.

INCH TAPERED BORE MOUNTING SDAF231K AND SDAF232K SERIES

- Each assembly includes the housing cap and base, cap bolts, bearing, bearing adapter, locknut and lockwasher, stabilizing ring and triple-ring seals.
- To order pillow block housing only, use the numbers listed in the Housing Only column. These units include cap and base, cap bolts, triple-ring seals and stabilizing ring.
- Assembly and pillow blocks described on this page constitute fixed units.
- To order float units, specify part number plus suffix float or FL.
- All assemblies shown are furnished in cast iron. If cast steel is desired, add the letter S to the alpha prefix (e.g., SDAFS 23152K).

Pillow Block Assembly	Shaft Dia. S-1[1]	A	B	C	D	E		F	H
						Max.	Min.		
	in.	in.	in.	in.	in.	in.	in.	in.	in.
SERIES SDAF231K									
SDAF23152K	**9 7/16** 9 1/2	**10 1/4**	**35**	**13 1/8**	**3 3/4**	**30 1/2**	**29**	**8 3/4**	**20 7/8**
SDAF23156K	9 15/16 10 **10 7/16** 10 1/2	**12**	**38 1/4**	**14 3/4**	**3 3/8**	**33 1/2**	**32 3/4**	**9**	**23 7/16**
SDAF23160K	**10 15/16**	**12**	**38 1/4**	**14 3/4**	**3 3/8**	**33 1/2**	**32 3/4**	**9**	**23 7/16**
SDAF23164K	11 **11 15/16**	**12 13/16**	**41 3/4**	**15 3/4**	**4 1/2**	**36 1/2**	**35**	**10 1/2**	**25 3/4**
SDAF23168K	**12 7/16**	**14**	**43 3/4**	**17 3/4**	**5**	**38 1/4**	**36 3/4**	**10 3/4**	**27 7/8**
SDAF23172K	**13 7/16** 13 1/2	**14 1/2**	**46**	**17 1/8**	**5 1/4**	**40 3/4**	**39 1/4**	**11**	**28 7/8**
SDAF23176K	**13 15/16** 14	**14 1/2**	**46**	**17 1/8**	**5 1/4**	**40 3/4**	**39 1/4**	**11**	**28 7/8**
SDAF23180K	14 15/16 **15**	**15 1/2**	**48 3/4**	**18 3/4**	**5 1/2**	**43 1/2**	**41 3/4**	**12 1/4**	**30 1/2**
SDAF23184K	**15 3/4**	**17**	**52**	**21**	**5 1/2**	**46 1/8**	**44 3/8**	**14 1/2**	**33 3/4**
SDAF23188K	**16 1/2**	**17**	**52**	**21**	**5 1/2**	**46 1/8**	**44 3/8**	**14 1/2**	**33 3/4**
SDAF23192K	**17**	**18**	**54 1/4**	**21 5/8**	**5 3/4**	**48 7/8**	**47 1/8**	**15**	**35 3/4**
SDAF23196K	**18**	**18**	**54 1/4**	**21 5/8**	**5 3/4**	**48 7/8**	**47 1/8**	**15**	**35 3/4**
SERIES SDAF232K									
SDAF23248K	**8 15/16** 9	**10 1/4**	**35**	**13 1/8**	**3 3/4**	**30 1/2**	**29**	**8 3/4**	**20 7/8**
SDAF23252K	**9 7/16** 9 1/2	**12**	**38 1/4**	**14 3/4**	**3 3/8**	**33 1/2**	**32 3/4**	**9**	**23 7/16**
SDAF23256K	**10 7/16** 10 1/2	**12**	**38 1/4**	**14 3/4**	**3 3/8**	**33 1/2**	**32 3/4**	**9**	**23 7/16**
SDAF23260K	**10 15/16** 11	**12 13/16**	**41 3/4**	**15 3/4**	**4 1/2**	**36 1/2**	**35**	**10 1/2**	**25 3/4**
SDAF23264K	**11 15/16**	**14**	**43 3/4**	**17 3/4**	**5**	**38 1/4**	**36 3/4**	**10 3/4**	**27 7/8**
SDAF23268K	**12 7/16**	**14 1/2**	**46**	**17 1/8**	**5 1/4**	**40 3/4**	**39 1/4**	**11**	**28 7/8**
SDAF23272K	**13 7/16**	**15 1/2**	**48 3/4**	**18 3/4**	**5 1/2**	**43 1/2**	**41 3/4**	**12 1/4**	**30 1/2**
SDAF23276K	**13 15/16**	**15 1/2**	**48 3/4**	**18 3/4**	**5 1/2**	**43 1/2**	**41 3/4**	**12 1/4**	**30 1/2**
SDAF23280K	**14 15/16**	**17**	**52**	**21**	**5 1/2**	**46 1/8**	**44 3/8**	**14 1/2**	**33 3/4**
SDAF23284K	**15 3/4**	**18**	**54 1/4**	**21 5/8**	**5 3/4**	**48 7/8**	**47 1/8**	**15**	**35 3/4**
SDAF23288K	**16 1/2**	**18**	**54 1/4**	**21 5/8**	**5 3/4**	**48 7/8**	**47 1/8**	**15**	**35 3/4**

[1]Bold shaft sizes are standard. When ordering non-standard pillow block assemblies, specify shaft size.
[2]See page D-76, table D-20 for suggested shaft diameter S-1 tolerances.
[3]Includes sleeve, locknut and lockwasher. Add shaft size to order.
[4]Housing Only includes cap, base, cap bolts, triple-ring seals and stabilizing ring as required. When ordering non-standard housing only specify the shaft size.
[5]Stabilizing ring used for fixed (FX) block; do not use for float (FL) mounting.
NOTE: Speed ratings are found in the dimension tables on pages D-37 through D-43.

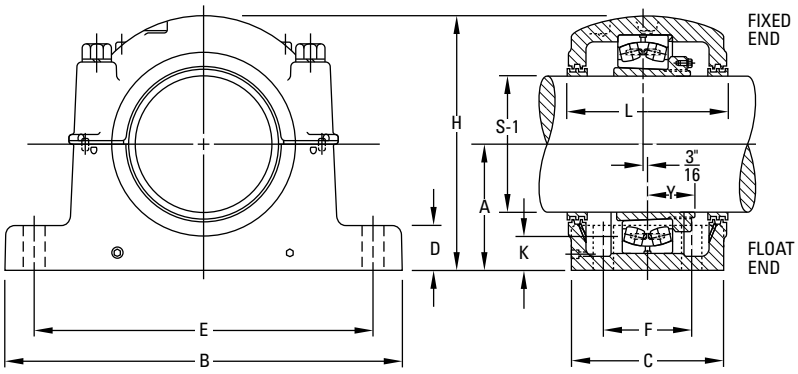

K Oil Level	L	Base Bolts 4 Req'd	Bearing No.	Adapter Assembly No.[3]	Housing Only[4]	Stabilizing Ring 1 Req'd[5]	Triple Seal 2 Req'd	Assembly Wt.
in.	in.	in.						lbs.
3 3/8	**13 3/4**	**1 5/8**	**23152K**	**SNP-3152 x 9 7/16**	**SDAF3152K**	**A5679**	**ER 891**	**1050**
				SNP-3152 x 9 1/2			ER 842	
				SNP-3156 x 10			ER 845	
				SNP-3156 x 10 7/16			ER 820	
4 3/4	**15 3/8**	**1 5/8**	**23156K**	**SNP-3156 x 10 1/2**	**SDAF3156K**	**A8967**	**ER 973**	**1300**
				SNP-3156 x 9 15/16			ER 840	
4 1/8	**15 3/8**	**1 5/8**	**23160K**	**SNP-3160 x 10 15/16**	**SDAF3160K**	**A8975**	**ER 858**	**1350**
				SNP-3160 x 11			ER 825	
4 3/8	**16 1/4**	**1 7/8**	**23164K**	**SNP-3164 x 11 15/16**	**SDAF3164K**	**A8970**	**ER 900**	**1900**
4 15/16	**18 1/4**	**2**	**23168K**	**SNP-3168 x 12 7/16**	**SDAF3168K**	**A8977**	**ER 975**	**2550**
5	**17 3/4**	**2**	**23172K**	**SNP-3172 x 13 7/16**	**SDAF3172K**	**A8974**	**ER 872**	**2600**
				SNP-3172 x 13 1/2			ER 823	
4 5/8	**17 3/4**	**2**	**23176K**	**SNP-3176 x 13 15/16**	**SDAF3176K**	**A8978**	**ER 875**	**2600**
				SNP-3176 x 14			ER 876	
				SNP-3180 x 14 15/16			ER 976	
5 1/8	**19 1/4**	**2 1/4**	**23180K**	**SNP-3180 x 15**	**SDAF3180K**	**A8979**	**ER 847**	**3000**
6	**21 3/4**	**2 1/4**	**23184K**	**SNP-3184 x 15 3/4**	**SDAF3184K**	**A8984**	**ER 907**	**4400**
5 9/16	**21 3/4**	**2 1/4**	**23188K**	**SNP-3188 x 16 1/2**	**SDAF3188K**	**A8976**	**ER 958**	**4600**
6	**22 1/4**	**2 1/2**	**23192K**	**SNP-3192 x 17**	**SDAF3192K**	**A8990**	**ER 838**	**5100**
5 1/2	**22 1/4**	**2 1/2**	**23196K**	**SNP-3196 x 18**	**SDAF3196K**	**A8998**	**ER 888**	**5200**
3 9/16	**13 3/4**	**1 5/8**	**23248K**	**SNP-148 x 8 15/16**	**SDAF3248K**	**A5679**	**ER 914**	**1100**
				SNP-148 x 9			ER 828	
4 3/4	**15 3/8**	**1 5/8**	**23252K**	**SNP-152 x 9 7/16**	**SDAF3252K**	**A8968**	**ER 891**	**1400**
				SNP-152 x 9 1/2			ER 842	
4 3/8	**15 3/8**	**1 5/8**	**23256K**	**SNP-3256 x 10 7/16**	**SDAF3256K**	**A8975**	**ER 973**	**1400**
				SNP-3256 x 10 1/2			ER 840	
4 1/2	**16 1/4**	**1 7/8**	**23260K**	**SNP-3260 x 10 15/16**	**SDAF3260K**	**A8970**	**ER 974**	**1900**
				SNP-3260 x 11			ER 974-1	
5 1/8	**18 1/4**	**2**	**23264K**	**SNP-3264 x 11 15/16**	**SDAF3264K**	**A8977**	**ER 900**	**2600**
5	**17 3/4**	**2**	**23268K**	**SNP-3268 x 12 7/16**	**SDAF3268K**	**A8978**	**ER 975**	**2700**
5 1/2	**19 1/4**	**2 1/4**	**23272K**	**SNP-3272 x 13 7/16**	**SDAF3272K**	**A8979**	**ER 979**	**3050**
4 3/8	**19 1/4**	**2 1/4**	**23276K**	**SNP-3276 x 13 15/16**	**SDAF3276K**	**A8980**	**ER 875**	**3000**
6	**21 3/4**	**2 1/4**	**23280K**	**SNP-3280 x 14 15/16**	**SDAF3280K**	**A8976**	**ER976**	**4650**
6 3/8	**22 1/4**	**2 1/2**	**23284K**	**SNP-3284 x 15 3/4**	**SDAF3284K**	**A8990**	**ER 907**	**4900**
5 7/8	**22 1/4**	**2 1/2**	**23288K**	**SNP-3288 x 16 1/2**	**SDAF3288K**	**A8988**	**ER 907**	**5200**

[1]Bold shaft sizes are standard. When ordering non-standard pillow block assemblies, specify shaft size.
[2]See page D-76, table D-20 for suggested shaft diameter S-1 tolerances.
[3]Includes sleeve, locknut and lockwasher. Add shaft size to order.
[4]Housing Only includes cap, base, cap bolts, triple-ring seals and stabilizing ring as required. When ordering non-standard housing only specify the shaft size.
[5]Stabilizing ring used for fixed (FX) block; do not use for float (FL) mounting.
NOTE: Speed ratings are found in the dimension tables on pages D-37 through D-43.

INCH STRAIGHT BORE MOUNTING SAF222 AND SAF223 SERIES

- Each assembly includes the housing cap and base, cap bolts, bearing, locknut and lockwasher, stabilizing ring and triple-ring seals.
- To order pillow block housing only, use the numbers listed in Housing Only column. These units include cap and base, cap bolts, triple-ring seals and stabilizing ring.
- Assembly and pillow blocks described on this page constitute fixed units.
- To order float units, specify part number plus suffix float or FL.
- All assemblies shown are furnished in cast iron. If cast steel is desired, add the letter S to the alpha prefix (e.g., SAFS 22217).
- Four-bolt bases are standard on all assemblies, unless noted.

Pillow Block Assembly	Shaft Dia.[1]		A	B	C	D	E		F	H	K	L	Y	Base Bolts Required	
	S-2	S-3					Max.	Min.			Oil Level			No.	Size
	in.	in.	in.	in.	in.	in.	in.	in.	in.	in.	in.	in.	in.		in.
SERIES SAF222															
SAF22217	3 15/16	3 3/16	3 3/4	13	3 1/2	1 1/4	11	9 7/8	–	7 1/4	1 7/16	4 15/16	1 27/64	2	3/4
FSAF22217	3 15/16	3 3/16	3 3/4	13	3 1/2	1 1/4	11	9 7/8	2 1/8	7 1/4	1 7/16	4 15/16	1 27/64	4	5/8
SAF22218	4 1/8	3 3/8	4	13 3/4	3 7/8	1 1/2	11 5/8	10 3/8	–	7 3/4	1 17/32	6 1/4	1 37/64	2	3/4
FSAF22218	4 1/8	3 3/8	4	13 3/4	3 7/8	1 1/2	11 5/8	10 3/8	2 1/8	7 3/4	1 17/32	6 1/4	1 37/64	4	5/8
SAF22220	4 1/2	3 13/16	4 1/2	15 1/4	4 3/8	1 3/4	13 1/8	11 5/8	–	8 11/16	1 3/4	6	1 49/64	2	7/8
FSAF22220	4 1/2	3 13/16	4 1/2	15 1/4	4 3/8	1 3/4	13 1/8	11 5/8	2 3/8	8 11/16	1 3/4	6	1 49/64	4	3/4
SAF22222	4 7/8	4 3/16	4 15/16	16 1/2	4 3/4	2	14 1/2	12 5/8	2 3/4	9 9/16	1 7/8	6 3/8	1 61/64	4	3/4
SAF22224	5 5/16	4 9/16	5 1/4	16 1/2	4 3/4	2 1/8	14 1/2	13 1/4	2 3/4	10 1/4	1 15/16	7 3/8	2 3/32	4	3/4
SAF22226	5 7/8	4 15/16	6	18 3/8	5 1/8	2 3/8	16	14 5/8	3 1/4	11 9/16	2 7/16	8	2 17/64	4	7/8
SAF22228	6 1/4	5 5/16	6	20 1/8	5 7/8	2 3/8	17 1/8	16	3 3/8	11 3/4	2 1/8	7 3/4	2 13/32	4	1
SAF22230	6 5/8	5 3/4	6 5/16	21 1/4	6 1/4	2 1/2	18 1/4	17	3 3/4	12 1/2	2 3/16	8 3/8	2 37/64	4	1
SAF22232	7	6 1/16	6 11/16	22	6 1/4	2 5/8	19 1/4	17 3/8	3 3/4	13 5/16	2 3/16	8 3/4	2 49/64	4	1
SAF22234	7 1/16	6 7/16	7 1/16	24 3/4	6 3/4	2 3/4	21 5/8	19 3/8	4 1/4	14 9/16	2 5/16	9 3/8	2 59/64	4	1
SAF22236	7 13/16	6 7/8	7 1/2	26 3/4	7 1/8	3	23 5/8	20 7/8	4 5/8	15 1/2	2 9/16	9 11/16	2 61/64	4	1
SAF22238	8 3/8	7 1/4	7 7/8	28	7 1/2	3 1/8	24 3/8	21 5/8	4 1/2	15 11/16	2 5/8	10 3/4	3 7/64	4	1 1/4
SAF22240	8 3/4	7 5/8	8 1/4	29 1/2	8	3 3/8	25	22 1/2	5	17 3/16	2 11/16	10 13/16	3 9/32	4	1 1/4
SAF22244	9 9/16	8 5/16	9 1/2	32 3/4	8 3/4	3 3/4	27 7/8	24 3/4	5 1/4	19 5/8	3 3/8	11 1/2	3 17/32	4	1 1/2
SERIES SAF223															
SAF22317	3 15/16	3 3/16	4 1/2	15 1/4	4 3/8	1 3/4	13 1/8	11 5/8	–	8 11/16	1 13/16	6	1 57/64	2	7/8
FSAF22317	3 15/16	3 3/16	4 1/2	15 1/4	4 3/8	1 3/4	13 1/8	11 5/8	2 3/8	8 11/16	1 13/16	6	1 57/64	4	3/4
SAF22318	4 1/8	3 3/8	4 3/4	15 1/2	4 3/8	2	13 1/2	12	2 1/4	9 3/16	2	7	2 3/64	4	3/4
SAF22320	4 1/2	3 13/16	5 1/4	16 1/2	4 3/4	2 1/8	14 1/2	13 1/4	2 3/4	10 1/4	2 1/8	7 3/8	2 19/64	4	3/4
SAF22322	4 7/8	4 3/16	6	18 3/8	5 1/8	2 3/8	16	14 5/8	3 1/4	11 9/16	2 1/2	8	2 31/64	4	7/8
SAF22324	5 5/16	4 9/16	6 5/16	21 1/4	6 1/4	2 1/2	18 1/4	17	3 3/4	12 1/2	2 9/16	8 3/8	2 41/64	4	1
SAF22326	5 7/8	4 15/16	6 11/16	22	6 1/4	2 5/8	19 1/4	17 3/8	3 3/4	13 15/16	2 5/8	8 3/4	2 27/32	4	1
SAF22328	6 1/4	5 5/16	7 1/16	24 3/4	6 3/4	2 3/4	21 5/8	19 3/8	4 1/4	14 9/16	2 11/16	9 3/8	3 5/64	4	1
SAF22330	6 5/8	5 3/4	7 1/2	26 3/4	7 1/8	3	23 5/8	20 7/8	4 5/8	15 1/2	2 7/8	9 11/16	3 17/64	4	1
SAF22332	7	6 1/16	7 7/8	28	7 1/2	3 1/8	24 3/8	21 5/8	4 1/2	15 11/16	2 15/16	10 3/4	3 7/16	4	1 1/4
SAF22334	7 7/16	6 7/16	8 1/4	29 1/2	8	3 3/8	25	22 1/2	5	17 3/16	3 1/16	10 13/16	3 19/32	4	1 1/4
SAF22336	7 13/16	6 7/8	8 7/8	31 1/4	8 1/4	3 1/2	26 5/8	24	5 1/4	18 1/2	3 3/8	11 1/4	3 47/64	4	1 1/4
SAF22338	8 3/8	7 1/4	9 1/2	32 3/4	8 3/4	3 3/4	27 7/8	24 3/4	5 1/4	19 5/8	3 11/16	11 1/2	3 57/64	4	1 1/2
SAF22340	8 3/4	7 5/8	9 7/8	34 1/4	9	4	29 1/2	26 1/4	5 1/2	20 3/16	3 3/4	12 1/4	4 5/64	4	1 1/2

[1]See page D-76, table D-20 for suggested shaft diameter S-2, S-3 tolerances.
[2]Housing Only includes cap, base, cap bolts, triple-ring seals and stabilizing rings as required.
[3]Stabilizing ring used for fixed (FX) block; do not use for float (FL) mounting.
[4]Triple-ring seals for other shaft diameters are available upon special order.
NOTE: Speed ratings are found in the dimension tables on pages D-37 through D-43.

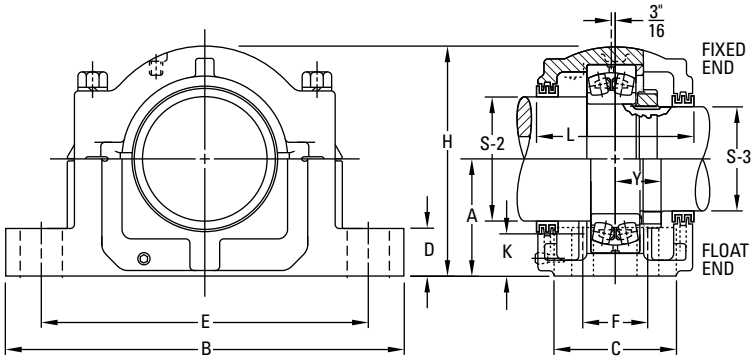

Bearing No.	Locknut	Lockwasher	Housing Only[2]	Stabilizing Ring 1 Req'd[3]	Triple Seal 1 Req'd[4]		Assembly Wt.
					S-2	S-3	
							lbs.
22217	AN17	W17	SAF217	SR-17-14	LER89	LER63	43
22217	AN17	W17	FSAF217	SR-17-14	LER89	LER63	43
22218	AN18	W18	SAF218	SR-18-15	LER96	LER72	50
22218	AN18	W18	FSAF218	SR-18-15	LER96	LER72	50
22220	AN20	W20	SAF220	SR-20-17	LER118	LER106	71
22220	AN20	W20	FSAF220	SR-20-17	LER118	LER106	71
22222	AN22	W22	SAF222	SR-22-19	LER121	LER113	81
22224	AN24	W24	SAF224	SR-24-20	LER127	LER119	90
22226	AN26	W26	SAF226	SR-26-0	LER136	LER122	127
22228	AN28	W28	SAF228	SR-28-0	LER144	LER127	149
22230	AN30	W30	SAF230	SR-30-0	LER151	LER134	175
22232	AN32	W32	SAF232	SR-32-0	LER156	LER142	210
22234	AN34	W34	SAF234	SR-34-0	LER161	LER148	280
22236	AN36	W36	SAF236	SR-36-30	LER165	LER154	305
22238	AN38	W38	SAF238	SR-38-32	LER171	LER160	350
22240	AN40	W40	SAF240	SR-40-34	LER175	LER164	420
22244	N44	W44	SAF244	SR-44-38	LER179	LER170	590
22317	AN17	W17	SAF317	SR-20-17	LER109	LER188	80
22317	AN17	W17	FSAF317	SR-20-17	LER109	LER188	80
22318	AN18	W18	SAF318	SR-21-18	LER112	LER191	92
22320	AN20	W20	SAF320	SR-24-20	LER118	LER106	109
22322	AN22	W22	SAF322	SR-0-22	LER121	LER113	145
22324	AN24	W24	SAF324	SR-0-24	LER127	LER119	195
22326	AN26	W26	SAF326	SR-0-26	LER136	LER122	235
22328	AN28	W28	SAF328	SR-0-28	LER144	LER127	300
22330	AN30	W30	SAF330	SR-36-30	LER151	LER134	335
22332	AN32	W32	SAF332	SR-38-32	LER156	LER142	405
22334	AN34	W34	SAF334	SR-40-34	LER161	LER148	465
22336	AN36	W36	SAF336	SR-0-36	LER165	LER154	525
22338	AN38	W38	SAF338	SR-44-38	LER171	LER160	635
22340	AN40	W40	SAF340	SR-0-40	LER175	LER164	700

[1]See page D-76, table D-20 for suggested shaft diameter S-2, S-3 tolerances.
[2]Housing Only includes cap, base, cap bolts, triple-ring seals and stabilizing rings as required.
[3]Stabilizing ring used for fixed (FX) block; do not use for float (FL) mounting.
[4]Triple-ring seals for other shaft diameters are available upon special order.
NOTE: Speed ratings are found in the dimension tables on pages D-37 through D-43.

INCH STRAIGHT BORE MOUNTING SDAF222 AND SDAF223 SERIES

- Each assembly includes the housing cap and base, cap bolts, bearing, locknut and washer, stabilizing ring, and triple-ring seals.
- To order pillow block housing only, use the numbers listed in the Housing Only column. These units include cap and base, cap bolts, triple-ring seals and stabilizing ring.
- Assembly and pillow blocks described on this page constitute fixed units.
- To order float units, specify part number plus suffix float or FL.
- All assemblies shown are furnished in cast iron. If cast steel is desired, add the letter S to the alpha prefix (e.g., SDAS 22220).

Pillow Block Assembly	Shaft Dia.[1]		A	B	C	D	E		F	H	K	L	Y	Base Bolts Required	
	S-2	S-3					Max.	Min.			Oil Level			No.	Size
	in.	in.	in.	in.	in.	in.	in.	in.	in.	in.	in.	in.	in.		in.
SERIES SDAF222															
SDAF22220	4 1/2	3 13/16	4 1/2	15 1/4	6	1 7/8	13 1/8	11 5/8	3 3/8	8 15/16	1 3/4	6 3/4	1 49/64	4	3/4
SDAF22222	4 7/8	4 3/16	4 15/16	16 1/2	6 3/4	2 1/8	14 1/2	12 5/8	4	9 7/8	1 7/8	7 1/4	1 61/64	4	7/8
SDAF22224	5 5/16	4 9/16	5 1/4	16 1/2	6 7/8	2 1/4	14 1/2	13 1/4	4 1/8	10 1/2	1 15/16	7 3/8	2 3/32	4	7/8
SDAF22226	5 7/8	4 15/16	6	18 3/8	7 1/2	2 3/8	16	14 5/8	4 1/2	11 7/8	2 7/16	8	2 17/64	4	1
SDAF22228	6 1/4	5 5/16	6	20 1/8	7 1/2	2 3/8	17 1/8	16	4 1/2	12 1/16	2 1/8	7 13/16	2 13/32	4	1
SDAF22230	6 5/8	5 3/4	6 5/16	21 1/4	7 7/8	2 1/2	18 1/4	17	4 3/4	12 13/16	2 3/16	8 3/8	2 37/64	4	1 1/8
SDAF22232	7	6 1/16	6 11/16	22	8 1/4	2 1/2	19 1/4	17 3/8	5	13 11/16	2 3/16	8 3/4	2 49/64	4	1 1/8
SDAF22234	7 1/16	6 7/16	7 1/16	24 3/4	9	2 1/2	21 5/8	19 3/8	5 1/2	14 1/4	2 5/16	9 5/8	2 59/64	4	1 1/4
SDAF22236	7 13/16	6 7/8	7 1/2	26 3/4	9 3/8	2 3/4	23 5/8	20 7/8	5 7/8	15 3/16	2 9/16	10	2 61/64	4	1 1/4
SDAF22238	8 3/8	7 1/4	7 7/8	27 5/8	10	3	23 1/2	21 1/2	6 1/4	16 1/4	2 5/8	10 5/8	3 7/64	4	1 3/8
SDAF22240	8 3/4	7 5/8	8 1/4	28 3/4	10 1/2	3 1/4	25	23	6 3/4	17 1/8	2 11/16	11 1/8	3 9/32	4	1 3/8
SDAF22244	9 9/16	8 5/16	9 1/2	32	11 1/4	3 1/2	27 7/8	25 5/8	7 1/4	19 1/4	3 3/8	11 7/8	3 17/32	4	1 1/2
SERIES SDAF223															
SDAF22317	3 15/16	3 3/16	4 1/2	15 1/4	6	1 7/8	13 1/8	11 5/8	3 3/8	8 15/16	1 3/16	6 3/4	1 57/64	4	3/4
SDAF22318	4 1/8	3 3/8	4 3/4	15 1/2	6 1/8	2	13 1/2	12	3 5/8	9 7/16	2	6 7/8	2 3/64	4	3/4
SDAF22320	4 1/2	3 13/16	5 1/4	16 1/2	6 7/8	2 1/4	14 1/2	13 1/4	4 1/8	10 1/2	2 1/8	7 3/8	2 19/64	4	7/8
SDAF22322	4 7/8	4 3/16	6	18 3/8	7 1/2	2 3/8	16	14 5/8	4 1/2	11 7/8	2 1/2	8	2 31/64	4	1
SDAF22324	5 5/16	4 9/16	6 5/16	21 1/4	7 7/8	2 1/2	18 1/4	17	4 3/4	12 13/16	2 9/16	8 3/8	2 41/64	4	1 1/8
SDAF22326	5 7/8	4 15/16	6 11/16	22	8 1/4	2 1/2	19 1/4	17 3/8	5	13 11/16	2 5/8	8 3/4	2 27/64	4	1 1/8
SDAF22328	6 1/4	5 5/16	7 1/16	24 3/4	9	2 1/2	21 5/8	19 3/8	5 1/2	14 1/4	2 11/16	9 5/8	3 5/64	4	1 1/4
SDAF22330	6 5/8	5 3/4	7 1/2	26 3/4	9 3/8	2 3/4	23 5/8	20 7/8	5 7/8	15 3/16	2 7/8	9 3/4	3 17/64	4	1 1/4
SDAF22332	7	6 1/16	7 7/8	27 5/8	10	3	23 1/2	21 1/2	6 1/4	16 1/4	2 15/16	10 5/8	3 7/16	4	1 3/8
SDAF22334	7 1/16	6 7/16	8 1/4	28 3/4	10 1/2	3 1/4	25	23	6 3/4	17 1/8	3 1/16	11 1/8	3 19/32	4	1 3/8
SDAF22336	7 13/16	6 7/8	8 7/8	30 1/2	10 3/4	3 1/4	26 3/8	24 1/8	6 7/8	17 15/16	3 3/8	11 3/8	3 47/64	4	1 1/2
SDAF22338	8 3/8	7 1/4	9 1/2	32	11 1/4	3 1/2	27 7/8	25 5/8	7 1/4	19 1/4	3 11/16	11 13/16	3 57/64	4	1 1/2
SDAF22340	8 3/4	7 5/8	9 7/8	33 1/2	11 3/4	3 1/2	29 1/4	26 5/8	7 5/8	19 15/16	3 3/4	12 1/4	4 5/64	4	1 5/8

[1]See page D-76, table D-20 for suggested shaft diameter S-2, S-3 tolerances.
[2]Housing Only includes cap, base, cap bolts, triple-ring seals and stabilizing rings as required.
[3]Stabilizing ring used for fixed (FX) block; do not use for float (FL) mounting.
[4]Triple-ring seals for other shaft diameters are available upon special order.
NOTE: Speed ratings are found in the dimension tables on pages D-37 through D-43.

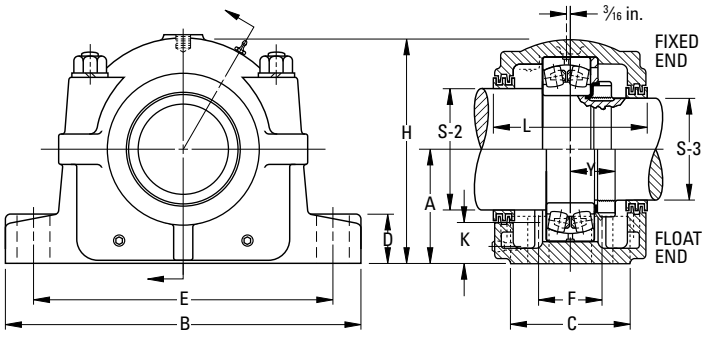

Bearing No.	Locknut	Lockwasher	Housing Only[2]	Stabilizing Ring 1 Req'd[3]	Triple Seal 1 Req'd[4]		Assembly Wt.
					S-2	S-3	
							lbs.
22220	AN20	W20	SDAF220	SR-20-17	LER118	LER106	81
22222	AN22	W22	SDAF222	SR-22-19	LER121	LER113	109
22224	AN24	W24	SDAF224	SR-24-20	LER127	LER119	113
22226	AN26	W26	SDAF226	SR-26-0	LER136	LER122	151
22228	AN28	W28	SDAF228	SR-28-0	LER144	LER127	175
22230	AN30	W30	SDAF230	SR-30-0	LER151	LER134	201
22232	AN32	W32	SDAF232	SR-32-0	LER156	LER142	245
22234	AN34	W34	SDAF234	SR-34-0	LER161	LER148	300
22236	AN36	W36	SDAF236	SR-36-30	LER165	LER154	335
22238	AN38	W38	SDAF238	SR-38-32	LER240	LER229	405
22240	AN40	W40	SDAF240	SR-40-34	LER244	LER233	465
22244	N44	W44	SDAF240	SR-44-38	LER248	LER239	650
22317	AN17	W17	SDAF317	SR-20-17	LER109	LER188	80
22318	AN18	W18	SDAF318	SR-21-18	LER112	LER191	92
22320	AN20	W20	SDAF320	SR-24-20	LER118	LER106	109
22322	AN22	W22	SDAF322	SR-0-22	LER121	LER113	145
22324	AN24	W24	SDAF324	SR-0-24	LER127	LER119	195
22326	AN26	W26	SDAF326	SR-0-26	LER136	LER122	280
22328	AN28	W28	SDAF328	SR-0-28	LER144	LER127	305
22330	AN30	W30	SDAF330	SR-36-30	LER151	LER134	375
22332	AN32	W32	SDAF332	SR-38-32	LER225	LER217	445
22334	AN34	W34	SDAF334	SR-40-34	LER230	LER220	525
22336	AN36	W36	SDAF336	SR-0-36	LER234	LER223	635
22338	AN38	W38	SDAF338	SR-44-38	LER240	LER229	700
22340	AN40	W40	SDAF340	SR-0-40	LER244	LER233	725

[1]See page D-76, table D-20 for suggested shaft diameter S-2, S-3 tolerances.
[2]Housing Only includes cap, base, cap bolts, triple-ring seals and stabilizing rings as required.
[3]Stabilizing ring used for fixed (FX) block; do not use for float (FL) mounting.
[4]Triple-ring seals for other shaft diameters are available upon special order.
NOTE: Speed ratings are found in the dimension tables on pages D-37 through D-43.

INCH STRAIGHT BORE MOUNTING SDAF231 AND SDAF232 SERIES

- Each assembly includes the housing cap and base, cap bolts, bearing, locknut and washer, stabilizing ring and triple-ring seals.
- To order pillow block housing only, use the numbers listed in the Housing Only column. These units include cap and base, cap bolts, triple-ring seals and stabilizing ring.
- Assembly and pillow blocks described on this page constitute fixed units.
- To order float units, specify part number plus suffix float or FL.
- Assemblies shown are furnished in cast iron. If cast steel is desired, add the letter S to the alpha prefix. If ductile iron is desired, add the letter D to the alpha prefix (e.g., SAFS 22515 or SAFD 22515).
- For fixed applications, both stabilizing rings must be used. Do not use stabilizing rings for float mounting.

Pillow Block Assembly	Shaft Dia.[1]		A	B	C	D	E		F	H	K	L
	S-2	S-3					Max.	Min.			Oil Level	
	in.	in.	in.	in.	in.	in.	in.	in.	in.	in.	in.	in.
SERIES SDAF231												
SDAF23152	11 1/2	9 15/16	10 1/4	35	13 1/8	3 3/4	30 1/2	29	8 3/4	20 7/8	3 3/8	14 1/4
SDAF23156	12 1/2	10 3/4	12	38 1/4	14 3/4	3 3/8	33 1/2	32 3/4	9	23 7/16	4 3/4	15 7/8
SDAF23160	13	11 1/2	12	38 1/4	14 3/4	3 3/8	33 1/2	32 3/4	9	23 7/16	4 1/8	15 7/8
SDAF23164	14	12 1/4	12 13/16	41 3/4	15 3/4	4 1/2	36 1/2	35	10 1/2	25 3/4	4 3/8	16 3/4
SDAF23168	15	13	14	43 3/4	17 3/4	5	38 1/4	36 3/4	10 3/4	27 7/8	4 15/16	18 3/4
SDAF23172	16	13 3/4	14 1/2	46	17 1/8	5 1/4	40 3/4	39 1/4	11	28 7/8	5	18
SDAF23176	17	14 1/2	14 1/2	46	17 1/8	5 1/4	40 3/4	39 1/4	11	28 7/8	4 5/8	18
SDAF23180	17 1/2	15 1/4	15 1/2	48 3/4	18 3/4	5 1/2	43 1/2	41 3/4	12 1/4	30 1/2	5 1/8	19 3/4
SDAF23184	18 1/2	15 3/4	17	52	21	5 1/2	46 1/8	44 3/8	14 1/2	33 3/4	6	22 1/4
SDAF23188	19 1/2	17	17	52	21	5 1/2	46 1/8	44 3/8	14 1/2	33 3/4	5 9/16	22 1/4
SDAF23192	20	17 3/4	18	54 1/4	21 5/8	5 3/4	48 7/8	47 1/8	15	35 3/4	6	22 3/4
SERIES SDAF232												
SDAF23248	10 1/2	9 3/16	10 1/4	35	13 1/8	3 3/4	30 1/2	29	8 3/4	20 7/8	3 9/16	14 1/4
SDAF23252	11 1/2	9 15/16	12	38 1/4	14 3/4	3 3/8	33 1/2	32 3/4	9	23 7/16	4 3/4	15 7/8
SDAF23256	12 1/2	10 3/4	12	38 1/4	14 3/4	3 3/8	33 1/2	32 3/4	9	23 7/16	4 3/8	15 7/8
SDAF23260	13	11 1/2	12 13/16	41 3/4	15 3/4	4 1/2	36 1/2	35	10 1/2	25 3/4	4 1/2	16 3/4
SDAF23264	14	12 1/4	14	43 3/4	17 3/4	5	38 1/4	36 3/4	10 3/4	27 7/8	5 1/8	18 3/4
SDAF23268	15	13	14 1/2	46	17 1/8	5 1/4	40 3/4	39 1/4	11	28 7/8	5	18
SDAF23272	16	13 3/4	15 1/2	48 3/4	18 3/4	5 1/2	43 1/2	41 3/4	12 1/4	30 1/2	5 1/2	19 3/4
SDAF23276	17	14 1/2	15 1/2	48 3/4	18 3/4	5 1/2	43 1/2	41 3/4	12 1/4	30 1/2	4 3/8	19 3/4
SDAF23280	17 1/2	15 1/4	17	52	21	5 1/2	46 1/8	44 3/8	14 1/2	33 3/4	6	22 1/4
SDAF23284	18 1/2	15 3/4	18	54 1/2	21 5/8	5 3/4	48 7/8	47 1/8	15	35 3/4	6 3/8	22 3/4
SDAF23288	19 1/2	17	18	54 1/2	21 5/8	5 3/4	48 7/8	47 1/8	15	35 3/4	5 7/8	22 3/4

[1]See page D-76, table D-20 for suggested shaft diameter S-2, S-3 tolerances.
[2]Housing Only includes cap, base, cap bolts, triple-ring seals and stabilizing rings as required.
[3]Stabilizing ring used for fixed (FX) block; do not use for float (FL) mounting.
[4]Triple-ring seals for other shaft diameters are available upon special order.
NOTE: Speed ratings are found in the dimension tables on pages D-37 through D-43.

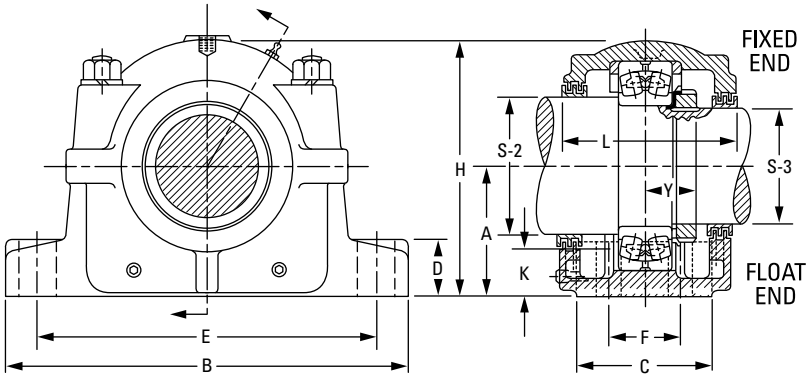

4 Base Bolts Req'd	Bearing No.	Locknut	Lockwasher	Housing Only[2]	Stabilizing Ring 1 Req'd[3]	Triple Seal 1 Req'd[4]		Assembly Wt.
						S-2	S-3	
in.								lbs.
1 5/8	23152	N052	P52	SDAF3152	A5679	ER832	ER845	1050
1 5/8	23156	N056	P56	SDAF3156	A8967	ER866	ER826	1250
1 5/8	23160	N060	P60	SDAF3160	A8975	ER824	ER832	1350
1 7/8	23164	N064	P64	SDAF3164	A8970	ER876	ER983	1850
2	23168	N068	P68	SDAF3168	A8977	ER847	ER846	2450
2	23172	N072	P72	SDAF3172	A8974	ER809	ER874	2500
2	23176	N076	P76	SDAF3176	A8978	ER811	ER950	2500
2 1/4	23180	N080	P80	SDAF3180	A8979	ER967	ER895	2800
2 1/4	23184	N084	P84	SDAF3184	A8984	ER978	ER907	4300
2 1/4	23188	N088	P88	SDAF3188	A8976	ER926	ER838	4300
2 1/2	23192	N092	P92	SDAF3192	A8990	ER808	ER906	5000
1 5/8	23248	N048	P48	SDAF3248	A5679	ER840	ER923	1100
1 5/8	23252	N052	P52	SDAF3252	A8968	ER832	ER845	1350
1 5/8	23256	N056	P56	SDAF3256	A8975	ER866	ER826	1400
1 7/8	23260	N060	P60	SDAF3260	A8970	ER846	ER856	1900
2	23264	N064	P64	SDAF3264	A8977	ER876	ER983	2500
2	23268	N068	P68	SDAF3268	A8978	ER847	ER846	2650
2 1/4	23272	N072	P72	SDAF3272	A8979	ER965	ER981	2950
2 1/4	23276	N076	P76	SDAF3276	A8980	ER838	ER984	3050
2 1/4	23280	N080	P80	SDAF3280	A8976	ER967	ER895	4500
2 1/2	23284	N084	P84	SDAF3284	A8990	ER978	ER907	5000
2 1/2	23288	N088	P88	SDAF3288	A8988	ER926	ER838	5050

[1]See page D-76, table D-20 for suggested shaft diameter S-2, S-3 tolerances.
[2]Housing Only includes cap, base, cap bolts, triple-ring seals and stabilizing rings as required.
[3]Stabilizing ring used for fixed (FX) block; do not use for float (FL) mounting.
[4]Triple-ring seals for other shaft diameters are available upon special order.
NOTE: Speed ratings are found in the dimension tables on pages D-37 through D-43.

INCH SHAFT DIAMETERS

TABLE D-20. SUGGESTED S-1, S-2, S-3 INCH SHAFT DIAMETERS

Diameter	Max.	Min.
1 7/16	1.4375	1.4345
1 11/16	1.6875	1.6845
1 7/8	1.8750	1.8720
1 15/16	1.9375	1.9345
2 1/16	2.0625	2.0585
2 1/8	2.1250	2.1210
2 3/16	2.1875	2.1835
2 1/4	2.2500	2.2460
2 3/8	2.3750	2.3710
2 7/16	2.4375	2.4335
2 9/16	2.5625	2.5585
2 5/8	2.6250	2.6210
2 11/16	2.6875	2.6835
2 13/16	2.8125	2.8085
2 7/8	2.8750	2.8710
2 15/16	2.9375	2.9335
3	3.0000	2.9960
3 1/16	3.0625	3.0585
3 3/16	3.1875	3.1835
3 1/4	3.2500	3.2460
3 3/8	3.3750	3.3710
3 7/16	3.4375	3.4335
3 5/8	3.6250	3.6210
3 15/16	3.9375	3.9335
4 1/8	4.1250	4.1200
4 3/16	4.1875	4.1825
4 7/16	4.4375	4.4325
4 1/2	4.5000	4.4950
4 9/16	4.5625	4.5575
4 7/8	4.8750	4.8700
4 15/16	4.9375	4.9325
5 3/16	5.1875	5.1825
5 5/16	5.3125	5.3075
5 7/16	5.4375	5.4325
5 3/4	5.7500	5.7450
5 7/8	5.8750	5.8700
5 15/16	5.9375	5.9325
6 1/16	6.0625	6.0575
6 1/4	6.2500	6.2450
6 7/16	6.4375	6.4325
6 5/8	6.6250	6.6200
6 7/8	6.8750	6.8700
6 15/16	6.9375	6.9325
7	7.0000	6.9950
7 3/16	7.1875	7.1825
7 1/4	7.2500	7.2450
7 7/16	7.4375	7.4325
7 5/8	7.6250	7.6200
7 13/16	7.8125	7.8075
7 15/16	7.9375	7.9325
8 5/16	8.3125	8.3065
8 3/8	8.3750	8.3690
8 7/16	8.4375	8.4315
8 1/2	8.5000	8.4940
8 3/4	8.7500	8.7440
8 15/16	8.9375	8.9315
9	9.0000	8.9940
9 7/16	9.4375	9.4315
9 1/2	9.5000	9.4940
9 9/16	9.5625	9.5565
9 15/16	9.9375	9.9315
10	10.0000	9.9940
10 7/16	10.4375	10.4305
10 1/2	10.5000	10.4930
10 15/16	10.9375	10.9305
11	11.0000	10.9930
11 7/16	11.4375	11.4305
11 1/2	11.5000	11.4930
11 15/16	11.9375	11.9305
12	12.0000	11.9930
12 7/16	12.4375	12.4295
12 1/2	12.5000	12.4920
12 15/16	12.9375	12.9295
13	13.0000	12.9920
13 7/16	13.4375	13.4295
13 1/2	13.5000	13.4920
13 15/16	13.9375	13.9295
14	14.0000	13.9920
15	15.0000	14.9920
16	16.0000	15.9920
17	17.0000	16.9920
17 1/2	17.5000	17.4920
18 1/2	18.5000	18.4920
19 1/2	19.5000	19.4920
20	20.0000	19.9920

INCH TU TAKE-UP UNITS

- The same care taken in the selection of stationary pillow blocks also must be applied to selecting the proper take-up unit.
- Load requirements should be carefully evaluated before specifying a particular Timken take-up assembly.
- The pedestal is made of stress-relieved cast iron. End bases are made of ductile iron. The guide rail and screw are steel.
- Units are available with travel lengths from 12 to 36 in., in 6-in. increments.
- Catalog numbers shown here are for the TU take-up unit only; pillow block assemblies must be ordered separately.
- Both two- and four-bolt pedestals are available and must be specified.

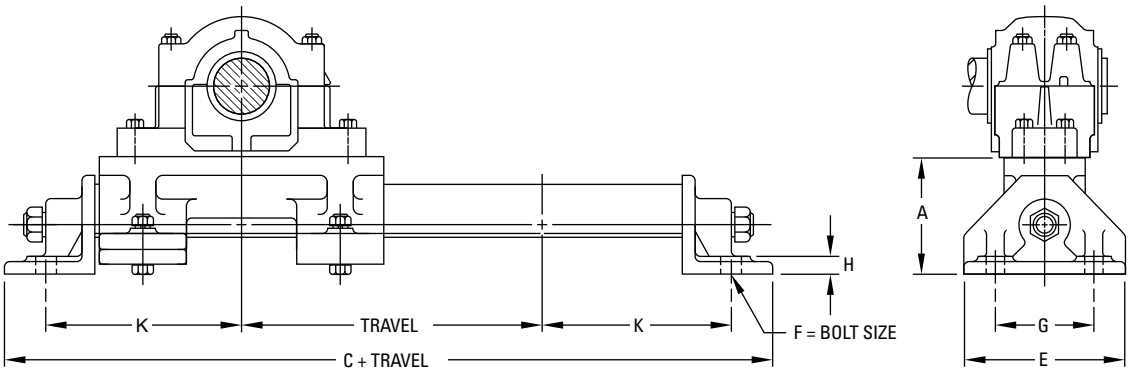

TU Take-Up Unit Catalog No.[1]	Pillow Block Housing No. (SAF or SDAF)			A	C	E	Bolt Size F	G	H	K
				in.	in.	in.	in.	in.	in.	in.
TU-3x	515L	–	–	4 7/8	20	6 1/2	5/8	4	3/4	8 1/4
TU-4x	516L	–	517L	5	21 3/4	6 1/2	3/4	4	3/4	9 1/8
TU-5x	518L	–	615L	5 1/4	23	7 1/2	3/4	5	3/4	9 3/4
TU-6x	520L	–	617L	5 1/2	24 3/4	7 1/2	3/4	5	7/8	10 3/4
TU-7x	522L	524L	620L	6	26	9	3/4	6 1/2	1	11 1/2
TU-8x	526L	–	622L	6	28	9	3/4	6 1/2	1	12 1/2
TU-8-1x	528L	–	–	6	29 1/2	9	3/4	6 1/2	1	13 1/4

[1]Enter 12, 18, 24, 30 or 36 to indicate travel in inches.

INCH TTU TAKE-UP UNITS

- The same care taken in the selection of stationary pillow blocks also must be applied to selecting the proper take-up unit.
- Load requirements should be carefully evaluated before specifying a particular take-up assembly.
- The frame assembly and adjusting screw of TTU units are made of steel.
- The bearing housing is cast iron. Steel or ductile iron housings are additional options.
- Units include housing for adapter-mounted bearings only, for either fixed or float position (be sure to specify).
- One stabilizing ring is included for fixed-position assemblies.
- Sealing is triple-ring labyrinth or end closures.
- For extremely contaminated environments, the DUSTAC seal is suggested. See page D-80 for more information.

Take-Up Unit and Frame No. (Travel in Bold)	Shaft Dia. S-1[1]	A	B	C	D	E	F	Bolt Size G	H	L	N	R	T
	in.	in.	in.	in.	in.	in.	in.	in.	in.	in.	in.	in.	
TTU-55-**12**	1 15/16	4 5/8	28 1/2	3 1/2	1 3/4	26 1/2	–	5/8	9	4	3/4	7 1/4	4
TTU-55-**18**		4 5/8	34 1/2	3 1/2	1 3/4	32 1/2	–	5/8	9	4	3/4	7 1/4	4
TTU-55-**24**		4 5/8	40 1/2	3 1/2	1 3/4	38 1/2	–	5/8	9	4	3/4	7 1/4	4
TTU-65-**12**	2 3/16	5	29 1/2	3 1/2	1 3/4	27 1/2	–	5/8	10	4 1/2	3/4	7 3/4	4
TTU-65-**18**		5	35 1/2	3 1/2	1 3/4	33 1/2	–	5/8	10	4 1/2	3/4	7 3/4	4
TTU-65-**24**		5	41 1/2	3 1/2	1 3/4	39 1/2	–	5/8	10	4 1/2	3/4	7 3/4	4
TTU-75-**6**	2 7/16	5 3/16	24 1/2	3 1/2	1 3/4	22 1/2	–	3/4	10 1/2	4 1/2	7/8	8 1/4	4
TTU-75-**12**		5 3/16	30 1/2	3 1/2	1 3/4	28 1/2	–	3/4	10 1/2	4 1/2	7/8	8 1/4	4
TTU-75-**18**		5 3/16	36 1/2	3 1/2	1 3/4	34 1/2	–	3/4	10 1/2	4 1/2	7/8	8 1/4	4
TTU-75-**24**		5 3/16	42 1/2	3 1/2	1 3/4	40 1/2	–	3/4	10 1/2	4 1/2	7/8	8 1/4	4
TTU-75-**30**		5 3/16	48 1/2	3 1/2	1 3/4	46 1/2	–	3/4	10 1/2	4 1/2	7/8	8 1/4	4
TTU-85-**6**	2 15/16	6	26 1/2	4 5/8	2	24 1/2	2	5/8	12 1/4	4 3/4	1	9 1/4	5
TTU-85-**12**		6	32 1/2	4 5/8	2	30 1/2	2	5/8	12 1/4	4 3/4	1	9 1/4	5
TTU-85-**18**		6	38 1/2	4 5/8	2	36 1/2	2	5/8	12 1/4	4 3/4	1	9 1/4	5
TTU-85-**24**		6	44 1/2	4 5/8	2	42 1/2	2	5/8	12 1/4	4 3/4	1	9 1/4	5
TTU-85-**30**		6	50 1/2	4 5/8	2	48 1/2	2	5/8	12 1/4	4 3/4	1	9 1/4	5
TTU-100-**12**	3 7/16	6 5/8	34 1/4	4 5/8	2	32	2	3/4	13 7/8	6	1 1/8	10	5 1/2
TTU-100-**18**		6 5/8	40 1/4	4 5/8	2	38	2	3/4	13 7/8	6	1 1/8	10	5 1/2
TTU-100-**24**		6 5/8	46 1/4	4 5/8	2	44	2	3/4	13 7/8	6	1 1/8	10	5 1/2
TTU-100-**30**		6 5/8	52 1/4	4 5/8	2	50	2	3/4	13 7/8	6	1 1/8	10	5 1/2
TTU-110-**12**	3 15/16	7 3/4	38 1/2	5 5/8	2 1/4	36	2 1/2	3/4	16 1/4	6 1/2	1 1/4	12	7
TTU-110-**18**		7 3/4	44 1/2	5 5/8	2 1/4	42	2 1/2	3/4	16 1/4	6 1/2	1 1/4	12	7
TTU-110-**24**		7 3/4	50 1/2	5 5/8	2 1/4	48	2 1/2	3/4	16 1/4	6 1/2	1 1/4	12	7
TTU-110-**30**		7 3/4	56 1/2	5 5/8	2 1/4	54	2 1/2	3/4	16 1/4	6 1/2	1 1/4	12	7
TTU-110-**36**		7 3/4	62 1/2	5 5/8	2 1/4	60	2 1/2	3/4	16 1/4	6 1/2	1 1/4	12	7
TTU-130-**12**	4 7/16	8 5/8	45 3/4	8 3/4	2 3/4	40 3/4	5	1 1/8	18 7/8	7 1/4	2	14 3/8	10
TTU-130-**18**		8 5/8	51 3/4	8 3/4	2 3/4	46 3/4	5	1 1/8	18 7/8	7 1/4	2	14 3/8	10
TTU-130-**24**		8 5/8	57 3/4	8 3/4	2 3/4	52 3/4	5	1 1/8	18 7/8	7 1/4	2	14 3/8	10
TTU-130-**30**		8 5/8	63 3/4	8 3/4	2 3/4	58 3/4	5	1 1/8	18 7/8	7 1/4	2	14 3/8	10
TTU-140-**12**	4 15/16	9 1/2	49 1/2	9 3/4	3	44 1/2	5 1/2	1 1/4	20 3/8	7 1/2	2 1/4	16 1/4	11
TTU-140-**18**		9 1/2	55 1/2	9 3/4	3	50 1/2	5 1/2	1 1/4	20 3/8	7 1/2	2 1/4	16 1/4	11
TTU-140-**24**		9 1/2	61 1/2	9 3/4	3	56 1/2	5 1/2	1 1/4	20 3/8	7 1/2	2 1/4	16 1/4	11
TTU-140-**30**		9 1/2	67 1/2	9 3/4	3	62 1/2	5 1/2	1 1/4	20 3/8	7 1/2	2 1/4	16 1/4	11

[1]See page D-76, table D-20 for suggested shaft diameter S-2, S-3 tolerances.
[2]Includes sleeve, locknut and lockwasher. Add shaft size to order.
[3]Stabilizing ring is used for fixed (FX) block; do not use for float (FL) mounting.
NOTE: Speed ratings are found in dimension tables on pages D-37 through D-43.

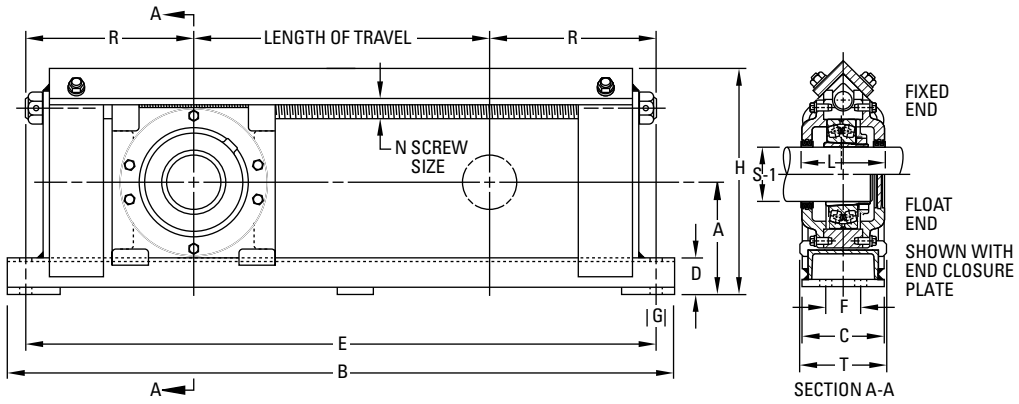

Bearing No.	Adapter Assembly No.[2]	Stabilizing Ring 1 Req'd[3]	Triple Seal 2 Req'd	Approx. Wt.
				lbs.
22211K	SNW-11	SR-11-0	LER24	55
22211K	SNW-11	SR-11-0	LER24	60
22211K	SNW-11	SR-11-0	LER24	65
22213K	SNW-13	SR-13-0	LER29	60
22213K	SNW-13	SR-13-0	LER29	65
22213K	SNW-13	SR-13-0	LER29	70
22215K	SNW-15	SR-15-0	LER37	65
22215K	SNW-15	SR-15-0	LER37	70
22215K	SNW-15	SR-15-0	LER37	75
22215K	SNW-15	SR-15-0	LER37	80
22215K	SNW-15	SR-15-0	LER37	85
22217K	SNW-17	SR-17-14	LER53	95
22217K	SNW-17	SR-17-14	LER53	100
22217K	SNW-17	SR-17-14	LER53	105
22217K	SNW-17	SR-17-14	LER53	110
22217K	SNW-17	SR-17-14	LER53	115
22220K	SNW-20	SR-20-17	LER102	140
22220K	SNW-20	SR-20-17	LER102	145
22220K	SNW-20	SR-20-17	LER102	150
22220K	SNW-20	SR-20-17	LER102	155
22222K	SNW-22	SR-22-19	LER109	200
22222K	SNW-22	SR-22-19	LER109	210
22222K	SNW-22	SR-22-19	LER109	220
22222K	SNW-22	SR-22-19	LER109	230
22222K	SNW-22	SR-22-19	LER109	240
22226K	SNW-26	SR-26-0	LER117	360
22226K	SNW-26	SR-26-0	LER117	380
22226K	SNW-26	SR-26-0	LER117	400
22226K	SNW-26	SR-26-0	LER117	420
22228K	SNW-28	SR-28-0	LER122	460
22228K	SNW-28	SR-28-0	LER122	480
22228K	SNW-28	SR-28-0	LER122	510
22228K	SNW-28	SR-28-0	LER122	530

[1]See page D-76, table D-20 for suggested shaft diameter S-2, S-3 tolerances.
[2]Includes sleeve, locknut and lockwasher. Add shaft size to order.
[3]Stabilizing ring is used for fixed (FX) block; do not use for float (FL) mounting.
NOTE: Speed ratings are found in dimension tables on pages D-37 through D-43.

INCH DUSTAC™ SHAFT SEAL

- Suggested for pillow blocks used in extremely contaminated environments, such as taconite mines.
- Provides protection against residual and airborne contaminants better than the triple-labyrinth shaft seal.
- Contributes significantly to extending service bearing life; reduces costs by helping prevent premature bearing damage.
- Because of its unique design, no special finish is required on the shaft. DUSTAC utilizes a V-shaped nitrile ring that rotates with the shaft and applies pressure to the cartridge face to help exclude contaminates.

TABLE D-21.

Pillow Block Housing No.		Shaft Dia. S-1	Assembly Standout B	DUSTAC™ Seal Assembly	V-Ring Seal	O-Ring	End Plug
500	600						
515	615	2 7/16	59/64	DV-37	V-60-A	2-228	EPS-4
516	616	2 11/16	59/64	DV-44	V-65-A	2-231	EPS-5
517	–	2 15/16	1	DV-53	V-75-A	2-230	EPS-6
518	–	3 3/16	1	DV-69	V-80-A	2-235	EPS-9
520	620	3 7/16	1	DV-102	V-85-A	2-234	EPS-11
522	622	3 15/16	1	DV-109	V-100-A	2-239	EPS-13
524	624	4 3/16	1 1/16	DV-113	V-110-A	2-238	EPS-14
526	626	4 7/16	1 1/16	DV-117	V-110-A	2-242	EPS-15
528	628	4 15/16	1 1/16	DV-122	V-130-A	2-244	EPS-16
530	630	5 3/16	1 1/16	DV-125	V-130-A	2-247	EPS-17
532	632	5 7/16	1 1/16	DV-130	V-140-A	2-249	EPS-18
534	634	5 15/16	1 1/16	DV-140	V-150-A	2-253	EPS-20
536	636	6 7/16	1 9/64	DV-148	V-160-A	2-259	EPS-21
538	638	6 15/16	1 9/64	DV-155	V-180-A	2-259	EPS-22
540	640	7 3/16	1 9/64	DV-159	V-180-A	2-259	EPS-23
544	–	7 15/16	1 15/32	DV-167	V-200-A	2-262	EPS-25

ORDER INSTRUCTIONS

- Shaft seal may be ordered in place of the standard LER triple-ring seals supplied with the pillow blocks listed. They also are available to retrofit existing installations.
- To order any pillow block housings with DUSTAC shaft seal on both sides, add the suffix DV to the number (e.g., SAF2522DV).
- To order pillow block housings with DUSTAC shaft seal and one end closed, add the suffix DC to the number (e.g., SAF22522DC).
- Standard sizes of DUSTAC shaft seals are shown in the table. Other sizes are available upon request.

INSTALLATION PROCEDURE

1. Check shaft diameters to print specification. Remove any burrs or sharp edges. Be sure that the shaft surface is clean and dry beyond the area of seal location.
2. Expand the V-ring seal over the shaft to the approximate inboard position (reference dimension B in the tables). *Make sure the lip of the seal faces the bearing.*
3. Slide the seal cartridge onto the shaft until the V-ring fits into its cavity.
4. Mount the bearing, sleeve, lockwasher and locknut in a normal manner and adjust for internal clearance.
5. If both ends have seals, repeat steps 2 and 3 with the V-ring going on last with its lip facing the bearing.
6. Thoroughly clean the housing base and remove any paint or burrs from the mating surfaces of the housing cap.
7. Lower shaft, bearing and seals into the housing base, taking care to guide the seals into the seal grooves.
8. On each shaft, there must be only one fixed bearing. If the bearing is to be fixed, the stabilizing ring can be inserted between the bearing outer ring and the housing shoulder on the locknut side of the bearing. All other bearings on this shaft should be centered in the housing.
9. The upper half of the housing or cap should be thoroughly cleaned and checked for burrs. Place it over the bearing and seals. The dowel pins will align the cap to the base.
10. After the cap bolts are tightened, it is most important to position the V-ring seal to its proper fitted width. This is accomplished by moving the seal until it is flush with the outside face of the cavity. This provides proper compression of the lip against the cartridge face.

NOTE

Housing caps and bases are not interchangeable.

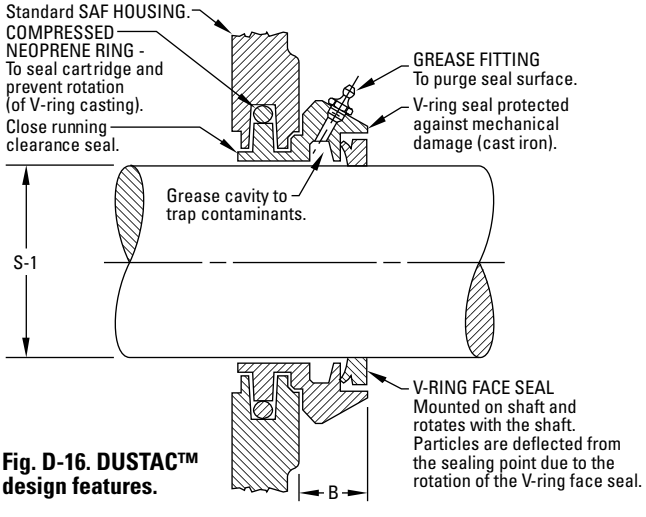

Fig. D-16. DUSTAC™ design features.

INCH SINE BAR GAGES

- Tapered-bore, antifriction bearings are mounted either on adapter sleeves or on tapered shaft seats.
- In cases where tapered bore bearings are mounted directly on the shaft, the shaft must conform to the tapered bore of the bearing to ensure a proper fit. If a proper fit is not achieved, the results could be:
  - Turning of the bearing inner race on the shaft.
  - Uneven loading of the bearing.
  - Severe inner race hoop stress.
  - Insufficient support (back-up) of the inner race on the shaft.
- All of these conditions could lead to premature bearing wear. Therefore, the manufacture, maintenance and measurement of accurate shaft tapers is important.
- There are two accepted ways of measuring tapered shafts: ring gages and sine bar gages.
- Precision measurement of tapered shafts is difficult with ring gages and may be impossible in the case of large shafts where gages are large, cumbersome and heavy.
- Sine bar gages provide an accurate and easy method of measurement.
- Lightweight, and easy to handle and use, sine bar gages achieve precise gaging of the shaft size and taper.
- A complete set for measurement of 1:12 shaft tapers consists of 3 in., 4 in., 5½ in., 7 in., 10 in. and 14 in. sine bar gages, sine bar saddle no. T-5491-C, web clamp no. T-5489-A and a wooden box no. T-5224-C. A complete set for 1:30 shaft tapers consists of 4 in., 6 in., 8 in. and 12 in. sine bar gages.
- Sine bars can be purchased individually or in any combination of sizes to meet your individual needs. Use tables D-22 and D-23 to select appropriate sine bar part number.
- All sine bars require a sine bar saddle and web clamp. A wooden box is optional.
- For information on the use of sine bars, prices and delivery, consult your Timken engineer.

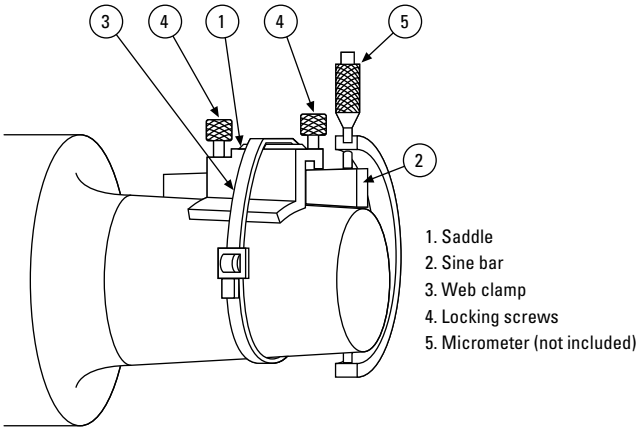

Fig. D-17. Parts of a sine gage.

TABLE D-22.

Part No.	Size	For Bearings
	in.	
T-3071-C	3.0000	22232K to 22240K
	3.0000	22322K to 22328K
	3.0000	23040K to 23048K
	3.0000	23130K to 23136K
	3.0000	23226K to 23230K
		23960K to 23972K
T-3072-C	4.0000	22248K to 22256K
	4.0000	22330K to 22340K
	4.0000	23052K to 23076K
	4.0000	23138K to 23148K
	4.0000	23232K to 23240K
		23976K to 239/560K
T-3073-C	5.5000	22260K to 22264K
	5.5000	23080K to 230/500K
	5.5000	23152K to 23164K
	5.5000	23244K to 23256K
		239/600K to 239/710K

NOTE: All sine bars require a sine bar saddle, T-5491-C, and a web clamp, T-5489-A.

TABLE D-23.

Part No.	Size	For Bearings
	in.	
T-3074-C	7.0000	230/530K to 230/750K
	7.0000	23168K to 23196K
	7.0000	23260K to 23276K
		239/750K to 239/1120K
T-3075-C	10.0000	230/800K to 230/1180
	10.0000	231/500K to 231/710K
	10.0000	23280K to 232/530K
		230/1250 and up
T-3076-C	14.0000	231/750K and up
	14.0000	232/560K and up
		239/118K and up
T-5476-C	4.0000	24040K to 24056K
	4.0000	24132K to 24144K
T-5477-C	6.0000	24060K to 24084K
	6.0000	24148K to 24160K
T-5478-C	8.0000	24089K to 240/630K
	8.0000	24164K to 24192K
T-5479-C	12.0000	240/670K and up
	12.0000	24196K and up

NOTE: The table above represents the sine bar sizes developed for a full range of tapered bore bearings with a 1:12 and a 1:30 taper. Additional sizes are available to fit a variety of width-and-taper combinations. Consult your local Timken engineer for availability.

SAF SPHERICAL ROLLER BEARING INCH ACCESSORIES

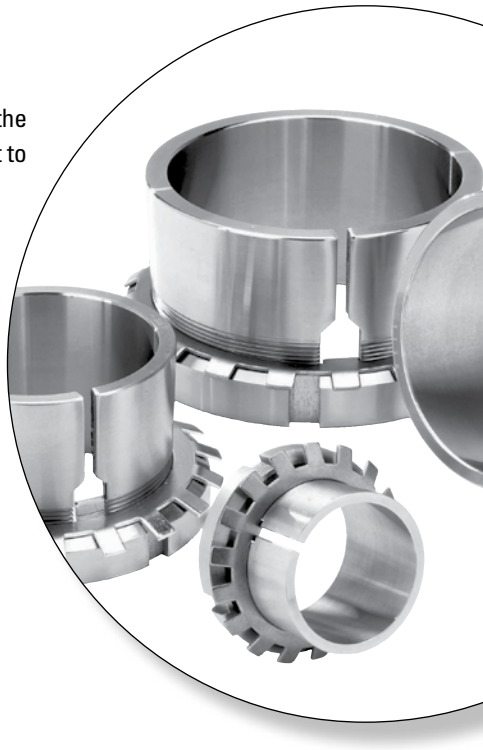

Spherical roller bearing accessories are manufactured to the same quality standards as our bearings, ensuring a secure fit to straight and stepped shafts.

- **Sizes**: Standard accessories for use with SAF assemblies are available in inch shaft sizes up to 1000 mm (40 in.). Accessories for metric shaft sizes also are available upon request.
- **Features**: Extensive product range, including hydraulic assist, for integration into a full range of industrial applications.
- **Benefits**: Supports full range of installation and removal needs, minimizing the chance for damage to the bearing.

Nomenclature D-84
Accessories Prefixes and Suffixes D-85
Inch Accessories – Pull-Type Sleeves D-86
Inch Accessories – Push-Type Sleeves D-96
Inch Accessories – Locknuts and Lockwashers D-100
Inch Accessories – Locknuts and Lockplates D-104
Inch HMVC Hydraulic Nuts D-108

NOMENCLATURE

Timken provides accessories for your every need. To complement our line of Timken® spherical roller bearings, we offer bearing sleeves and locking devices in a wide range of sizes. These accessories are manufactured to the same quality standards as our bearings, ensuring a secure fit to straight and stepped shafts. Available in sizes up to 1000 mm (39.3701 in.), bearing sleeves are available in two distinct designs: assembled adapter sleeves and withdrawal sleeves.

ADAPTER SLEEVES

Timken adapter sleeves are used in conjunction with a nut and locking device to mount a tapered bore bearing onto a straight shaft using a pull-type fit. Smaller size assemblies (20 mm [0.78 in.] - 200 mm [12 in.] shaft) commonly use simple nuts, whereas larger assemblies (sizes >200 mm [12 in.]) may use HMV hydraulic nuts to assist in mounting. Table D-24 outlines our part number nomenclature, which is consistent with world standards for adapter sleeves.

TABLE D-24. INCH ADAPTER SLEEVES (SNW, SNP) FOR INCH SHAFT SIZES ARE SUPPLIED WITH CORRESPONDING LOCKNUT AND LOCKING DEVICE

Assembly	Sleeve	Locknut	Locking Device
SNW	S	N, AN	W
SNP	S	N	P

NOTE: SNW assembly consists of a sleeve, locknut and lockwasher.
NOTE: SNP assembly consists of a sleeve, locknut and lockplate.
NOTE: Metric accessories are available. Please reference the Timken Spherical Roller Bearing Catalog (order no. 10446).

WITHDRAWAL SLEEVES

Withdrawal sleeves feature a push-type mounting arrangement and a locking device (i.e., locknut or lockplate) to secure a bearing to a shaft. This design is not as widely used as the adapter sleeve assembly, and it does require the use of a specially designed dismounting nut. Timken's part number nomenclature for withdrawal sleeves also conforms to industry-accepted standards. Nuts are not supplied with the withdrawal sleeve and must be ordered separately. The dismounting of large assemblies can be eased by using a hydraulic nut (HMV).

TABLE D-25. INCH WITHDRAWAL SLEEVE FOR INCH SHAFT SIZES

Sleeve	Locknut	Lockwasher/Plate	Dismounting Nut
SK	N, AN	W, P	AN, ARN, RN, N

LOCKING DEVICE

Timken offers a wide range of locknuts to locate bearing assemblies on application shafts. Sometimes referred to as shaft or withdrawal nuts, they are used to secure the assembly onto, and sometimes aid with the removal from the shaft.

LOCKWASHERS (W)

Locking washers are designed to secure the relative movement of a properly positioned locknut, so that a bearing and adapter sleeve remain tightly fitted to a shaft or a bearing remains secure against a shaft shoulder. The tab in the bore of the washer engages a keyway in the shaft or slot in the adapter sleeve. There are tabs on the O.D. of the washer that can be bent over into slots on the circumference of the locknut. Locking washers are used with locknuts with inch dimensions in the N and AN series.

LOCKPLATES (P)

Lockplates are bolted onto the outboard face of the locknut and fit into a keyway machined in the shaft or a slot in the adapter sleeve.

- P series are mounted on inch shafts sizes with N locknuts.

To learn more about our spherical roller bearing accessories, contact your Timken engineer. Standard suffixes and prefixes are found on page D-85.

INCH ACCESSORIES – PULL-TYPE SLEEVES

SNW/SNP – PULL-TYPE SLEEVE, LOCKNUT, LOCKWASHER/LOCKPLATE ASSEMBLIES

- The table below shows dimensions for adapter assemblies and components used in the mounting of tapered bore bearings on shafts.
- SNW assembly consists of a sleeve, locknut and lockwasher.
- SNP assembly consists of a sleeve, locknut and lockplate.

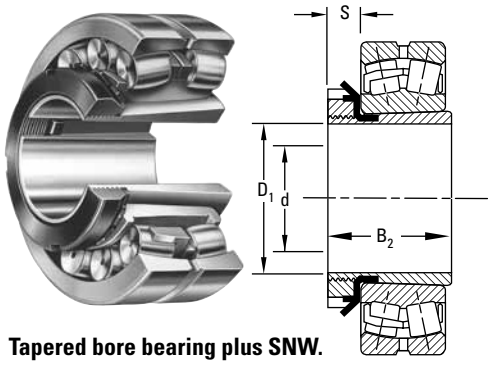

Tapered bore bearing plus SNW.

Bearing No.[1]	Accessory Numbers				Shaft Dimensions		Adapter Dimensions			SNW/SNP Assembly Wt.
	Assembly	Sleeve	Locknut	Lockwasher Lockplate	Diameter d	Tolerance[2]	B_2	S	D_1	
					in.	in.	in.	in.	in.	lbs.
SERIES 222K										
22207K	**SNW-07 x 1 3/16**	**S-07**	**N-07**	**W-07**	**1 3/16**	**-0.003**	**1 29/64**	**29/64**	**2 1/16**	**0.32**
22208K	**SNW-08 x 1 5/16**	**S-08**	**N-08**	**W-08**	**1 5/16**	**-0.003**	**1 21/32**	**29/64**	**2 1/4**	**0.42**
	SNW-09 x 1 3/8	S-09 x 1 3/8			1 3/8					
22209K	**SNW-09 x 1 7/16**	**S-09**	**N-09**	**W-09**	**1 7/16**	**-0.003**	**1 37/64**	**1/2**	**2 17/32**	**0.6**
	SNW-09 x 1 1/2	S-09 x 1 1/2			1 1/2					
	SNW-10 x 1 5/8	S-10 x 1 5/8			1 5/8					
22210K	**SNW-10 x 1 11/16**	**S-10**	**N-10**	**W-10**	**1 11/16**	**-0.003**	**1 49/64**	**9/16**	**2 11/16**	**0.7**
	SNW-10 x 1 3/4	S-10 x 1 3/4			1 3/4					
	SNW-11 x 1 7/8	S-11 x 1 7/8			1 7/8					
22211K	**SNW-11 x 1 15/16**	**S-11**	**N-11**	**W-11**	**1 15/16**	**-0.003**	**1 27/32**	**9/16**	**2 31/32**	**0.8**
	SNW-11 x 2	S-11 x 2			2					
22212K	**SNW-12 x 2 1/16**	**S-12**	**N-12**	**W-12**	**2 1/16**	**-0.004**	**1 63/64**	**19/32**	**3 5/32**	**1.1**
	SNW-13 x 2 1/8	S-13 x 2 1/8			2 1/8					
22213K	**SNW-13 x 2 3/16**	**S-13**	**N-13**	**W-13**	**2 3/16**	**-0.004**	**2 3/32**	**5/8**	**3 3/8**	**1.4**
	SNW-13 x 2 1/4	S-13 x 2 1/4			2 1/4					
22214K	**SNW-14 x 2 5/16**	**S-14**	**N-14**	**W-14**	**2 5/16**	**-0.004**	**2 11/64**	**5/8**	**3 5/8**	**1.8**
	SNW-15 x 2 3/8	S-15 x 2 3/8			2 3/8					
22215K	**SNW-15 x 2 7/16**	**S-15**	**AN-15**	**W-15**	**2 7/16**	**-0.004**	**2 19/64**	**43/64**	**3 7/8**	**2.0**
	SNW-15 x 2 1/2	S-15 x 2 1/2			2 1/2					
	SNW-16 x 2 5/8	S-16 x 2 5/8			2 5/8					
22216K	**SNW-16 x 2 11/16**	**S-16**	**AN-16**	**W-16**	**2 11/16**	**-0.004**	**2 3/8**	**43/64**	**4 5/32**	**2.4**
	SNW-16 x 2 3/4	S-16 x 2 3/4			2 3/4					
	SNW-17 x 2 13/16	S-17 x 2 13/16			2 13/16					
	SNW-17 x 2 7/8	S-17 x 2 7/8			2 7/8					
22217K	**SNW-17 x 2 15/16**	**S-17**	**AN-17**	**W-17**	**2 15/16**	**-0.004**	**2 31/64**	**45/64**	**4 13/32**	**3.0**
	SNW-17 x 3	S-17 x 3			3					
	SNW-18 x 3 1/16	S-18 x 3 1/16			3 1/16					
	SNW-18 x 3 1/8	S-18 x 3 1/8			3 1/8					
22218K	**SNW-18 x 3 3/16**	**S-18**	**AN-18**	**W-18**	**3 3/16**	**-0.004**	**2 41/64**	**25/32**	**4 21/32**	**3.0**
	SNW-18 x 3 1/4	S-18 x 3 1/4			3 1/4					
22219K	**SNW-19 x 3 5/16**	**S-19**	**AN-19**	**W-19**	**3 5/16**	**-0.004**	**2 49/64**	**13/16**	**4 15/16**	**3.3**
	SNW-20 x 3 3/8	S-20 x 3 3/8			3 3/8					

[1]Bold shaft sizes are standard. When ordering non-standard accessories, specify shaft size.
[2]Tolerance range is from +0 to value listed.

Continued on next page.

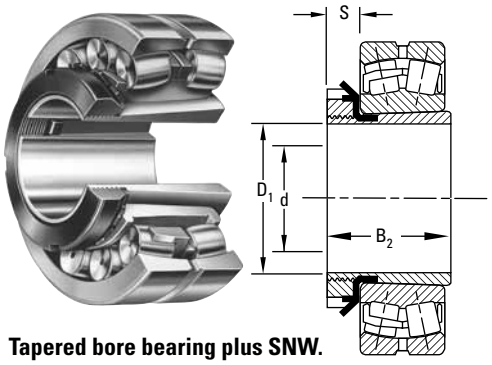

Tapered bore bearing plus SNW.

Continued from previous page.

Bearing No.[1]	Accessory Numbers				Shaft Dimensions		Adapter Dimensions			SNW/SNP Assembly Wt.
	Assembly	Sleeve	Locknut	Lockwasher Lockplate	Diameter d	Tolerance[2]	B_2	S	D_1	
					in.	in.	in.	in.	in.	lbs.
22220K	**SNW-20 x 3 7/16**	**S-20**	**AN-20**	**W-20**	**3 7/16**	**-0.004**	**2 7/8**	**27/32**	**5 3/16**	**4.4**
	SNW-20 x 3 1/2	S-20 x 3 1/2			3 1/2					
	SNW-22 x 3 13/16	S-22 x 3 13/16			3 13/16					
	SNW-22 x 3 7/8	S-22 x 3 7/8			3 7/8					
22222K	**SNW-22 x 3 15/16**	**S-22**	**AN-22**	**W-22**	**3 15/16**	**-0.004**	**3 13/64**	**29/32**	**5 23/32**	**5.0**
	SNW-22 x 4	S-22 x 4			4					
	SNW-24 x 4 1/16	S-22 x 4 1/16			4 1/16					
	SNW-24 x 4 1/8	S-22 x 4 1/8			4 1/8					
22224K	**SNW-24 x 4 3/16**	**S-24**	**AN-24**	**W-24**	**4 3/16**	**-0.005**	**3 15/32**	**15/16**	**6 1/8**	**6.7**
	SNW-24 x 4 1/4	S-24 x 4 1/4			4 1/4					
	SNW-26 x 4 5/16	S-26 x 4 5/16			4 5/16					
	SNW-26 x 4 3/8	S-26 x 4 3/8			4 3/8					
22226K	**SNW-26 x 4 7/16**	**S-26**	**AN-26**	**W-26**	**4 7/16**	**-0.005**	**3 49/64**	**1**	**6 3/4**	**8.6**
	SNW-26 x 4 1/2	S-26 x 4 1/2			4 1/2					
	SNW-28 x 4 13/16	S-28 x 4 13/16			4 13/16					
	SNW-28 x 4 7/8	S-28 x4 7/8			4 7/8					
22228K	**SNW-28 x 4 15/16**	**S-28**	**AN-28**	**W-28**	**4 15/16**	**-0.005**	**3 63/64**	**1 1/16**	**7 3/32**	**10.3**
	SNW-28 x 5	S-28 x 5			5					
	SNW-30 x 5 1/8	S-30 x 5 1/8			5 1/8					
22230K	**SNW-30 x 5 3/16**	**S-30**	**AN-30**	**W-30**	**5 3/16**	**-0.005**	**4 15/64**	**1 1/8**	**7 11/16**	**13.5**
	SNW-30 x 5 1/4	S-30 x 5 1/4			5 1/4					
	SNW-32 x 5 3/8	S-30 x 5 3/8			5 3/8					
22232K	**SNW-32 x 5 7/16**	**S-32**	**AN-32**	**W-32**	**5 7/16**	**-0.005**	**4 37/64**	**1 3/16**	**8 1/16**	**15.6**
	SNW-32 x 5 1/2	S-32 x 5 1/2			5 1/2					
	SNW-34 x 5 13/16	S-34 x 5 13/16			5 13/16					
	SNW-34 x 5 7/8	S-34 x 5 7/8			5 7/8					
22234K	**SNW-34 x 5 15/16**	**S-34**	**AN-34**	**W-34**	**5 15/16**	**-0.005**	**4 27/32**	**1 7/32**	**8 21/32**	**19.4**
	SNW-34 x 6	S-34 x 6			6					
	SNW-36 x 6 15/16	S-36 x 6 15/16			6 5/16					
	SNW-36 x 6 3/8	S-36 x 6 3/8			6 3/8					
22236K	**SNW-36 x 6 7/16**	**S-36**	**AN-36**	**W-36**	**6 7/16**	**-0.005**	**5 1/32**	**1 1/4**	**9 1/16**	**20.5**
	SNW-36 x 6 1/2	S-36 x 6 1/2			6 1/2					

[1]Bold shaft sizes are standard. When ordering non-standard accessories, specify shaft size.
[2]Tolerance range is from +0 to value listed.

Continued on next page.

INCH ACCESSORIES – PULL-TYPE SLEEVES – *continued*

SNW/SNP – PULL-TYPE SLEEVE, LOCKNUT, LOCKWASHER/LOCKPLATE ASSEMBLIES

- The table below shows dimensions for adapter assemblies and components used in the mounting of tapered bore bearings on shafts.
- SNW assembly consists of a sleeve, locknut and lockwasher.
- SNP assembly consists of a sleeve, locknut and lockplate.

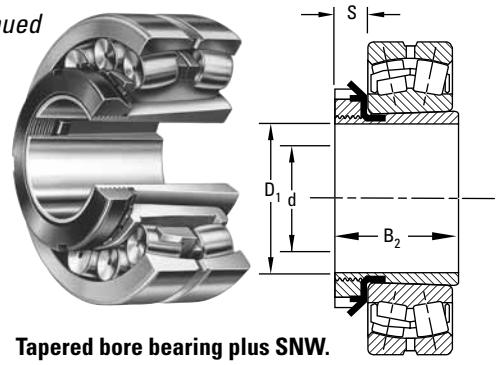

Tapered bore bearing plus SNW.

Continued from previous page.

Bearing No.[1]	Accessory Numbers				Shaft Dimensions		Adapter Dimensions			SNW/SNP Assembly Wt.
	Assembly	Sleeve	Locknut	Lockwasher Lockplate	Diameter d	Tolerance[2]	B_2	S	D_1	
					in.	in.	in.	in.	in.	lbs.
	SNW-38 x 6 13/16	S-38 x 6 13/16			6 13/16					
	SNW-38 x 6 7/8	S-38 x 6 7/8			6 7/8					
22238K	**SNW-38 x 6 15/16**	**S-38**	**AN-38**	**W-38**	**6 15/16**	**-0.005**	**5 17/64**	**1 9/32**	**9 15/32**	**23.4**
	SNW-38 x 7	S-38 x 7			7					
	SNW-40 x 7 1/8	S-40 x 7 1/8			7 1/8					
22240K	**SNW-40 x 7 3/16**	**S-40**	**AN-40**	**W-40**	**7 3/16**	**-0.005**	**5 31/64**	**1 11/32**	**9 27/32**	**30.5**
	SNW-40 x 7 1/4	S-40 x 7 1/4			7 1/4					
	SNW-44 x 7 13/16	S-44 x 7 13/16			7 13/16					
	SNW-44 x 7 7/8	S-44 x 7 7/8			7 7/8					
22244K	**SNW-44 x 7 15/16**	**S-44**	**N-044**	**W-44**	**7 15/16**	**-0.005**	**5 29/32**	**1 3/8**	**11**	**33.0**
	SNW-44 x 8	S-44 x 8			8					
22248K	**SNP-48 x 8 7/16**	**S-48**	**N-048**	**P-48**	**8 7/16**	**-0.006**	**6 5/8**	**1 23/64**	**11 7/16**	**37.5**
	SNP-48 x 8 15/16	S-48 x 8 15/16			8 15/16					
22252K	**SNP-52 x 9 7/16**	**S-52**	**N-052**	**P-52**	**9 7/16**	**-0.006**	**7 37/64**	**1 27/64**	**12 3/16**	**44.0**
SERIES 230K										
	SNW-3024 x 4 1/16	S-3024 x 4 1/16			4 1/16					
	SNW-3024 x 4 1/8	S-3024 x 4 1/8			4 1/8					
23024K	**SNW-3024 x 4 3/16**	**S-3024**	**N-024**	**W-024**	**4 3/16**	**-0.005**	**2 61/64**	**13/16**	**5 11/16**	**6.1**
	SNW-3024 x 4 1/4	S-3024 x 4 1/4			4 1/4					
	SNW-3026 x 4 5/16	S-3024 x 4 5/16			4 5/16					
	SNW-3026 x 4 3/8	S-3024 x 4 3/8			4 3/8					
23026K	**SNW-3026 x 4 7/16**	**S-3026**	**N-026**	**W-026**	**4 7/16**	**-0.005**	**3 15/64**	**7/8**	**6 1/8**	**7.5**
	SNW-3026 x 4 1/2	S-3026 x 4 1/2			4 1/2					
	SNW-3028 x 4 13/16	S-3028 x 4 13/16			4 13/16					
	SNW-3028 x 4 7/8	S-3028 x 4 7/8			4 7/8					
23028K	**SNW-3028 x 4 15/16**	**S-3028**	**N-028**	**W-028**	**4 15/16**	**-0.005**	**3 11/32**	**15/16**	**6 1/2**	**8.4**
	SNW-3030 x 5 1/8	S-3030 x 5 1/8			5 1/8					
23030K	**SNW-3030 x 5 3/16**	**S-3030**	**N-030**	**W-030**	**5 3/16**	**-0.005**	**3 31/64**	**31/32**	**7 1/8**	**9.8**
	SNW-3030 x 5 1/4	S-3030 x 5 1/4			5 1/4					
	SNW-3032 x 5 3/8	S-3032 x 5 3/8			5 3/8					
23032K	**SNW-3032 x 5 7/16**	**S-3032**	**N-032**	**W-032**	**5 7/16**	**-0.005**	**3 23/32**	**1 1/32**	**7 1/2**	**11.8**
	SNW-3032 x 5 1/2	S-3032 x 5 1/2			5 1/2					

[1]Bold shaft sizes are standard. When ordering non-standard accessories, specify shaft size.
[2]Tolerance range is from +0 to value listed.

Continued on next page.

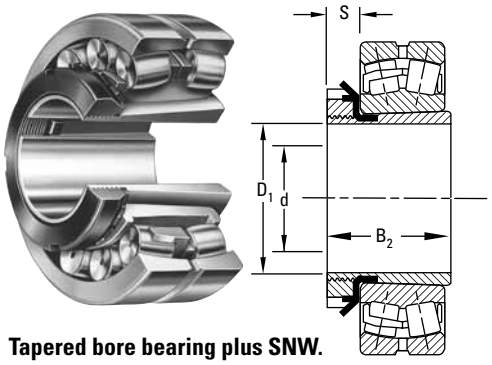

Tapered bore bearing plus SNW.

Continued from previous page.

Bearing No.[1]	Accessory Numbers				Shaft Dimensions		Adapter Dimensions			SNW/SNP Assembly Wt.
	Assembly	Sleeve	Locknut	Lockwasher Lockplate	Diameter d	Tolerance[2]	B_2	S	D_1	
					in.	in.	in.	in.	in.	lbs.
	SNW-3034 x 5 13/16	S-3034 x 5 13/16			5 13/16					
	SNW-3034 x 5 7/8	S-3034 x 5 7/8			5 7/8					
23034K	**SNW-3034 x 5 15/16**	**S-3034**	**N-034**	**W-034**	**5 15/16**	**-0.005**	**4 1/64**	**1 1/16**	**7 7/8**	**13.3**
	SNW-3034 x 6	S-3034 x 6			6					
	SNW-3036 x 6 5/16	S-3036 x 6 5/16			6 5/16					
	SNW-3036 x 6 3/8	S-3036 x 6 3/8			6 3/8					
23036K	**SNW-3036 x 6 7/16**	**S-3036**	**N-036**	**W-036**	**6 7/16**	**-0.005**	**4 11/32**	**1 3/32**	**8 1/4**	**15.2**
	SNW-3036 x 6 1/2	S-3036 x 6 1/2			6 1/2					
	SNW-3038 x 6 13/16	S-3038 x 6 13/16			6 13/16					
	SNW-3038 x 6 7/8	S-3038 x 6 7/8			6 7/8					
23038K	**SNW-3038 x 6 15/16**	**S-3038**	**N-038**	**W-038**	**6 15/16**	**-0.005**	**4 13/32**	**1 1/8**	**8 11/16**	**16.7**
	SNW-3038 x 7	S-3038 x 7			7					
	SNW-3040 x 7 1/8	S-3040 x 7 1/8			7 1/8					
23040K	**SNW-3040 x 7 3/16**	**S-3040**	**N-040**	**W-040**	**7 3/16**	**-0.005**	**4 3/4**	**1 3/16**	**9 7/16**	**19.7**
	SNW-3040 x 7 1/4	S-3040 x 7 1/4			7 1/4					
	SNW-3044 x 7 13/16	S-3044 x 7 13/16			7 13/16					
	SNW-3044 x 7 7/8	S-3044 x 7 7/8			7 7/8					
23044K	**SNW-3044 x 7 15/16**	**S-3044**	**N-044**	**W-044**	**7 15/16**	**-0.005**	**5 1/8**	**1 1/4**	**10 1/4**	**24.4**
	SNW-3044 x 8	S-3044 x 8			8					
	SNP-3048 x 8 7/16	S-3048 x 8 7/16			8 7/16					
	SNP-3048 x 8 1/2	S-3048 x 8 1/2			8 1/2					
23048K	**SNP-3048 x 8 15/16**	**S-3048**	**N-048**	**P-48**	**8 15/16**	**-0.006**	**5 7/16**	**1 11/32**	**11 7/16**	**32.2**
	SNP-3048 x 9	S-3048 x 9			9					
23052K	**SNP-3052 x 9 7/16**	**S-3052**	**N-052**	**P-52**	**9 7/16**	**-0.006**	**6 1/64**	**1 13/32**	**12 3/16**	**41.1**
	SNP-3052 x 9 1/2	S-3052 x 9 1/2			9 1/2					
	SNP-3056 x 9 15/16	S-3056 x 9 15/16			9 15/16					
	SNP-3056 x 10	S-3056 x 10			10					
23056K	**SNP-3056 x 10 7/16**	**S-3056**	**N-056**	**P-56**	**10 7/16**	**-0.007**	**6 3/16**	**1 1/2**	**13**	**45.4**
	SNP-3056 x 10 1/2	S-3056 x 10 1/2			10 1/2					
23060K	**SNP-3060 x 10 15/16**	**S-3060**	**N-060**	**P-60**	**10 15/16**	**-0.007**	**6 47/64**	**1 9/16**	**14 3/16**	**58.9**
	SNP-3060 x 11	S-3060 x 11			11					
	SNP-3064 x 11 7/16	S-3060 x 11 7/16			11 7/16					
	SNP-3064 x 11 1/2	S-3060 x 11 1/2			11 1/2					
23064K	**SNP-3064 x 11 15/16**	**S-3064**	**N-064**	**P-64**	**11 15/16**	**-0.007**	**6 61/64**	**1 21/32**	**15**	**65.7**
	SNP-3064 x 12	S-3064 x 12			12					

[1]Bold shaft sizes are standard. When ordering non-standard accessories, specify shaft size.
[2]Tolerance range is from +0 to value listed.

Continued on next page.

INCH ACCESSORIES – PULL-TYPE SLEEVES – continued

SNW/SNP – PULL-TYPE SLEEVE, LOCKNUT, LOCKWASHER/LOCKPLATE ASSEMBLIES

- The table below shows dimensions for adapter assemblies and components used in the mounting of tapered bore bearings on shafts.
- SNW assembly consists of a sleeve, locknut and lockwasher.
- SNP assembly consists of a sleeve, locknut and lockplate.

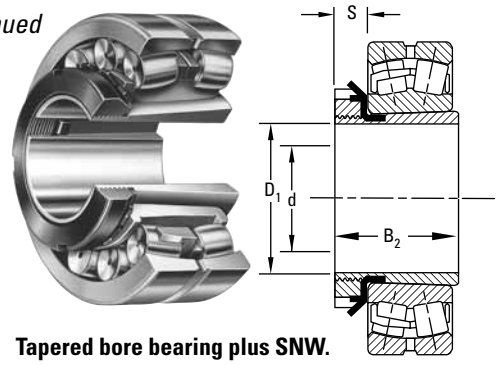

Tapered bore bearing plus SNW.

Continued from previous page.

Bearing No.[1]	Accessory Numbers				Shaft Dimensions		Adapter Dimensions			SNW/SNP Assembly Wt.
	Assembly	Sleeve	Locknut	Lockwasher Lockplate	Diameter d	Tolerance[2]	B_2	S	D_1	
					in.	in.	in.	in.	in.	lbs.
23068K	**SNP-3068 X 12 7/16**	**S-3068**	**N-068**	**P-68**	**12 7/16**	**-0.008**	**7 35/64**	**1 25/32**	**15 3/4**	**77.8**
	SNP-3068 X 12 1/2	S-3068 x 12 1/2			12 1/2					
	SNP-3072 X 12 15/16	S-3072 x 12 15/16			12 15/16					
	SNP-3072 X 13	S-3072 x 13			13					
23072K	**SNP-3072 X 13 7/16**	**S-3072**	**N-072**	**P-72**	**13 7/16**	**-0.008**	**7 37/64**	**1 25/32**	**16 1/2**	**86.2**
	SNP-3072 X 13 1/2	S-3072 x 13 1/2			13 1/2					
23076K	**SNP-3076 X 13 15/16**	**S-3076**	**N-076**	**P-76**	**13 15/16**	**-0.008**	**7 3/4**	**1 57/64**	**17 3/4**	**94.3**
	SNP-3076 X 14	S-3076 x 14			14					
23080K	**SNP-3080 x 15**	**S-3080**	**N-080**	**P-80**	**15**	**-0.008**	**8 13/32**	**2 1/16**	**18 1/2**	**100.0**
23084K	**SNP-3084 x 15 3/4**	**S-3084**	**N-084**	**P-84**	**15 3/4**	**-0.008**	**8 31/64**	**2 1/16**	**19 5/16**	**110.0**
23088K	**SNP-3088 x 16 1/2**	**S-3088**	**N-088**	**P-88**	**16 1/2**	**-0.008**	**9 7/64**	**2 3/8**	**20 1/2**	**144.0**
23092K	**SNP-3092 x 17**	**S-3092**	**N-092**	**P-92**	**17**	**-0.008**	**9 11/32**	**2 3/8**	**21 1/4**	**153.0**
23096K	**SNP-3096 x 18**	**S-3096**	**N-096**	**P-96**	**18**	**-0.008**	**9 29/64**	**2 3/8**	**22 1/16**	**162.0**
230/500K	**SNP-30/500 x 18 1/2**	**S-30/500**	**N-500**	**P-500**	**18 1/2**	**-0.008**	**9 27/32**	**2 45/64**	**22 13/16**	**180.0**
230/530K	**SNP-30/530 x 19 1/2**	**S-30/530**	**N-530**	**P-530**	**19 1/2**	**-0.008**	**10 37/64**	**2 45/64**	**24 13/16**	**221.0**
230/560K	**SNP-30/560 x 20 15/16**	**S-30/560**	**N-560**	**P-560**	**20 15/16**	**-0.008**	**11 7/32**	**2 61/64**	**25 9/16**	**243.0**
230/600K	**SNP-30/600 x 21 15/16**	**S-30/600**	**N-600**	**P-600**	**21 15/16**	**-0.008**	**11 29/64**	**2 61/64**	**27 9/16**	**322.0**
230/630K	**SNP-30/630 x 23 15/16**	**S-30/630**	**N-630**	**P-630**	**23 15/16**	**-0.008**	**11 59/64**	**2 61/64**	**28 3/4**	**350.0**
230/670K	**SNP-30/670 x 24 15/16**	**S-30/670**	**N-670**	**P-670**	**24 15/16**	**-0.008**	**12 27/32**	**3 9/64**	**30 11/16**	**421.0**
230/710K	**SNP-30/710 x 26 7/16**	**S-30/710**	**N-710**	**P-710**	**26 7/16**	**-0.008**	**13 1/2**	**3 37/64**	**32 11/16**	**492.0**
230/750K	**SNP-30/750 x 27 15/16**	**S-30/750**	**N-750**	**P-750**	**27 15/16**	**-0.008**	**14 3/32**	**3 37/64**	**34 1/4**	**536.0**
230/800K	**SNP-30/800 x 29 7/16**	**S-30/800**	**N-800**	**P-800**	**29 7/16**	**-0.008**	**14 13/32**	**3 37/64**	**36 1/4**	**662.0**
230/850K	**SNP-30/850 x 31 7/16**	**S-30/850**	**N-850**	**P-850**	**31 7/16**	**-0.008**	**15**	**3 37/64**	**38 9/16**	**747.0**
230/900K	**SNP-30/900 x 33 7/16**	**S-30/900**	**N-900**	**P-900**	**33 7/16**	**-0.008**	**15 11/16**	**3 61/64**	**40 9/16**	**853.0**
230/950K	**SNP-30/950 x 34 7/16**	**S-30/950**	**N-950**	**P-950**	**35 7/16**	**-0.008**	**16 1/2**	**3 61/64**	**43**	**935.0**

[1]Bold shaft sizes are standard. When ordering non-standard accessories, specify shaft size.
[2]Tolerance range is from +0 to value listed.

Continued on next page.

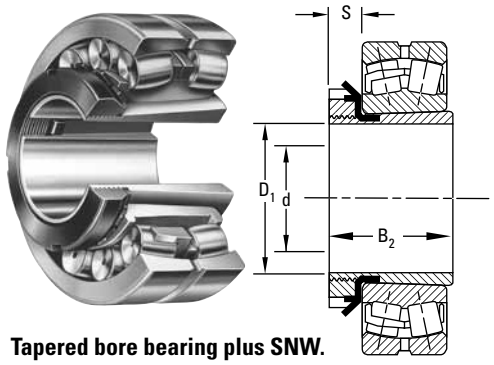

Tapered bore bearing plus SNW.

Continued from previous page.

Bearing No.[1]	Accessory Numbers				Shaft Dimensions		Adapter Dimensions			SNW/SNP Assembly Wt.
	Assembly	Sleeve	Locknut	Lockwasher Lockplate	Diameter d	Tolerance[2]	B_2	S	D_1	
					in.	in.	in.	in.	in.	lbs.
SERIES 223K AND 232K										
22308K	**SNW-108 x 1 5/16**	**S-108**	**N-08**	**W-08**	**1 5/16**	**-0.003**	**2 1/64**	**1/2**	**2 1/4**	**0.8**
22309K	**SNW-109 x 1 7/16**	**S-109**	**N-09**	**W-09**	**1 7/16**	**-0.003**	**2 9/64**	**1/2**	**2 17/32**	**0.8**
22310K	**SNW-110 x 1 11/16**	**S-110**	**N-10**	**W-10**	**1 11/16**	**-0.003**	**2 25/64**	**9/16**	**2 11/16**	**0.9**
22311K	**SNW-111 x 1 15/16**	**S-111**	**N-11**	**W-11**	**1 15/16**	**-0.003**	**2 33/64**	**9/16**	**2 31/32**	**0.9**
22312K	**SNW-112 x 2 1/16**	**S-112**	**N-12**	**W-12**	**2 1/16**	**-0.004**	**2 21/32**	**19/32**	**3 5/32**	**1.2**
22313K	**SNW-113 x 2 3/16**	**S-113**	**N-13**	**W-13**	**2 3/16**	**-0.004**	**2 49/64**	**5/8**	**3 3/8**	**1.7**
22314K	**SNW-114 x 2 5/16**	**S-114**	**N-14**	**W-14**	**2 5/16**	**-0.004**	**2 61/64**	**5/8**	**3 5/8**	**2.3**
	SNW-115 x 2 3/8	S-115 x 2 3/8			2 3/8					
22315K	**SNW-115 x 2 7/16**	**S-115**	**AN-15**	**W-15**	**2 7/16**	**-0.004**	**3 5/64**	**43/64**	**3 7/8**	**3.0**
	SNW-115 x 2 1/2	S-115 x 2 1/2			2 1/2					
	SNW-116 x 2 5/8	S-116 x 2 5/8			2 5/8					
22316K	**SNW-116 x 2 11/16**	**S-116**	**AN-16**	**W-16**	**2 11/16**	**-0.004**	**3 13/64**	**43/64**	**4 5/32**	**3.2**
	SNW-116 x 2 3/4	S-116 x 3/4			2 3/4					
	SNW-117 x 2 13/16	S-117 x 2 13/16			2 13/16					
	SNW-117 x 2 7/8	S-117 x 2 7/8			2 7/8					
22317K	**SNW-117 x 2 15/16**	**S-117**	**AN-17**	**W-17**	**2 15/16**	**-0.004**	**3 5/16**	**45/64**	**4 13/32**	**3.5**
	SNW-117 x 3	S-117 x 3			3					
	SNW-118 x 3 1/16	S-118 x 3 1/16			3 1/16					
	SNW-118 x 3 1/8	S-118 x 3 1/8			3 1/8					
22318K	**SNW-118 x 3 3/16**	**S-118**	**AN-18**	**W-18**	**3 3/16**	**-0.004**	**3 35/64**	**25/32**	**4 21/32**	**4.0**
	SNW-118 x 3 1/4	S-118 x 3 1/4			3 1/4					
22319K	**SNW-119 x 3 5/16**	**S-119**	**AN-19**	**W-19**	**3 5/16**	**-0.004**	**3 45/64**	**13/16**	**4 15/16**	**5.0**
	SNW-120 x 3 5/16	S-120 x 3 5/16			3 5/16					
	SNW-120 x 3 3/8	S-120 x 3 7/8			3 3/8					
22320K 23220K	**SNW-120 x 3 7/16**	**S-120**	**AN-20**	**W-20**	**3 7/16**	**-0.004**	**3 31/32**	**27/32**	**5 3/16**	**6.2**
	SNW-120 x 3 1/2	S-120 x 3 1/2			3 1/2					
	SNW-122 x 3 13/16	S-122 x 3 13/16			3 13/16					
	SNW-122 x 3 3/8	S-122 x 3 3/8			3 7/8					
22322K 23222K	**SNW-122 x 3 15/16**	**S-122**	**AN-22**	**W-22**	**3 15/16**	**-0.004**	**4 11/32**	**29/32**	**5 23/32**	**6.5**
	SNW-122 x 4	S-122 x 4			4					

[1]Bold shaft sizes are standard. When ordering non-standard accessories, specify shaft size.
[2]Tolerance range is from +0 to value listed.

Continued on next page.

INCH ACCESSORIES – PULL-TYPE SLEEVES – continued

SNW/SNP – PULL-TYPE SLEEVE, LOCKNUT, LOCKWASHER/LOCKPLATE ASSEMBLIES

- The table below shows dimensions for adapter assemblies and components used in the mounting of tapered bore bearings on shafts.
- SNW assembly consists of a sleeve, locknut and lockwasher.
- SNP assembly consists of a sleeve, locknut and lockplate.

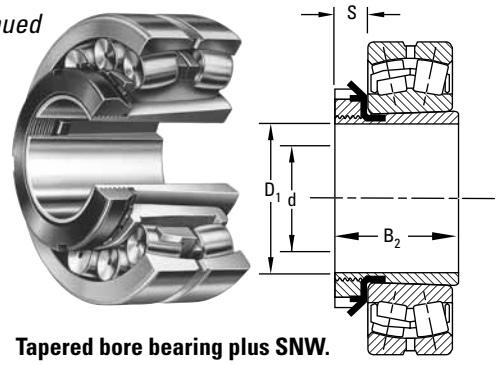

Tapered bore bearing plus SNW.

Continued from previous page.

Bearing No.[1]		Accessory Numbers				Shaft Dimensions		Adapter Dimensions			SNW/SNP Assembly Wt.
		Assembly	Sleeve	Locknut	Lockwasher Lockplate	Diameter d	Tolerance[2]	B_2	S	D_1	
						in.	in.	in.	in.	in.	lbs.
		SNW-124 x 4 1/16	S-124 x 4 1/16			4 1/16					
		SNW-124 x 4 1/8	S-124 x 4 1/8			4 1/8					
22324K	**23224K**	**SNW-124 x 4 3/16**	**S-124**	**AN-24**	**W-24**	**4 3/16**	**-0.005**	**4 41/64**	**15/16**	**6 1/8**	**8.0**
		SNW-124 x 4 1/4	S-124 x 4 1/4			4 1/4					
		SNW-126 x 4 5/16	S-126 x 4 5/16			4 5/16					
		SNW-126 x 4 3/8	S-126 4 3/8			4 3/8					
22326K	**23226K**	**SNW-126 x 4 7/16**	**S-126**	**AN-26**	**W-26**	**4 7/16**	**-0.005**	**4 63/64**	**1**	**6 3/4**	**12.4**
		SNW-126 x 4 1/2	S-126 x 4 1/2			4 1/2					
		SNW-126 x 4 9/16	S-126 x 4 9/16			4 9/16					
		SNW-128 x 4 13/16	S-128 x 4 13/16			4 13/16					
		SNW-128 x 4 7/8	S-128 x 4 7/8			4 7/8					
22328K	**23228K**	**SNW-128 x 4 15/16**	**S-128**	**AN-28**	**W-28**	**4 15/16**	**-0.005**	**5 21/64**	**1 1/16**	**7 3/32**	**13.0**
		SNW-128 x 5	S-128 x 5			5					
		SNW-130 x 5 1/8	S-130 x 5 1/8			5 1/8					
22330K	**23230K**	**SNW-130 x 5 3/16**	**S-130**	**AN-30**	**W-30**	**5 3/16**	**-0.005**	**5 5/8**	**1 1/8**	**7 11/16**	**17.6**
		SNW-130 x 5 1/4	S-130 x 5 1/4			5 1/4					
		SNW-130 x 5 5/16	S-130 x 5 5/16			5 5/16					
		SNW-130 x 5 3/8	S-130 x 5 3/8			5 3/8					
		SNW-132 x 5 3/8	S-132 x 5 3/8								
22332K	**23232K**	**SNW-132 x 5 7/16**	**S-132**	**AN-32**	**W-32**	**5 7/16**	**-0.005**	**5 59/64**	**1 3/16**	**8 1/16**	**18.5**
		SNW-132 x 5 1/2	S-132 x 5 1/2								
		SNW-134 x 5 13/16	S-134 x 5 13/16								
		SNW-134 x 5 7/8	S-134 x 5 7/8								
22334K	**23234K**	**SNW-134 x 5 15/16**	**S-134**	**AN-34**	**W-34**	**5 15/16**	**-0.005**	**6 3/16**	**1 7/32**	**8 21/32**	**21.0**
		SNW-134 x 6	S-134 x 6								
22336K	**23236K**	**SNW-136 x 6 7/16**	**S-136**	**AN-36**	**W-36**	**6 7/16**	**-0.005**	**6 29/64**	**1 1/4**	**9 1/16**	**22.5**
		SNW-138 x 6 13/16	S-138 x 6 13/16								
		SNW-138 x 6 7/8	S-138 x 6 7/8								
22338K	**23238K**	**SNW-138 x 6 15/16**	**S-138**	**AN-38**	**W-38**	**6 15/16**	**-0.005**	**6 3/4**	**1 9/32**	**9 15/32**	**28.0**
		SNW-138 x 7	S-138 x 7								
		SNW-140 x 7 1/8	S-140 x 7 1/8			7 1/8					
22340K	**23240K**	**SNW-140 x 7 3/16**	**S-140**	**AN-40**	**W-40**	**7 3/16**	**-0.005**	**7 3/32**	**1 11/32**	**9 27/32**	**36.0**
		SNW-140 x 7 1/4	S-140 x 7 1/4			7 1/4					

[1]Bold shaft sizes are standard. When ordering non-standard accessories, specify shaft size.
[2]Tolerance range is from +0 to value listed.

Continued on next page.

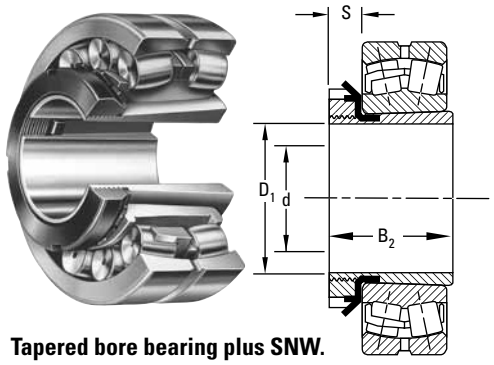

Tapered bore bearing plus SNW.

Continued from previous page.

Bearing No.[1]		Accessory Numbers				Shaft Dimensions		Adapter Dimensions			SNW/SNP Assembly Wt.
		Assembly	Sleeve	Locknut	Lockwasher Lockplate	Diameter d	Tolerance[2]	B_2	S	D_1	
						in.	in.	in.	in.	in.	lbs.
22344K	**23244K**	**SNW-144 x 7 15/16**	**S-144**	**N-044**	**W-44**	**7 15/16**	**-0.005**	**7 9/32**	**1 3/8**	**11**	**47.0**
22348K	**23248K**	**SNP-148 x 8 15/16**	**S-148**	**N-048**	**P-48**	**8 15/16**	**-0.006**	**8 7/64**	**1 11/32**	**11 7/16**	**38.3**
		SNP-148 x 9	S-148 x 9			9					
22352K	**23252K**	**SNP-152 x 9 7/16**	**S-152**	**N-052**	**P-52**	**9 7/16**	**-0.006**	**8 49/64**	**1 13/32**	**12 13/16**	**53.4**
		SNP-152 x 9 ½	S-152 x 9 ½			9 ½					
22356K	**23256K**	**SNP-3256 x 10 7/16**	**S-3256**	**N-056**	**P-56**	**10 7/16**	**-0.007**	**8 15/16**	**1 ½**	**13**	**61.3**
		SNP-3256 x 10 ½	S-3256 x 10 ½			10 ½	-0.007				
23260K		**SNP-3260 x 10 15/16**	**S-3260**	**N-060**	**P-60**	**10 15/16**	**-0.007**	**9 5/8**	**1 9/16**	**14 3/32**	**68.5**
		SNP-3260 x 11	S-3260 x 11			11	-0.007				
23264K		**SNP-3264 x 11 15/16**	**S-3264**	**N-064**	**P-64**	**11 15/16**	**-0.007**	**10 23/64**	**1 21/32**	**15**	**98.0**
		SNP-3264 x 12	S-3264 x 12			12	-0.007				
		SNP-3268 x 12 ½	S-3268 x 12 ½			12 ½	-0.007				
23268K		**SNP-3268 x 12 7/8**	**S-3268**	**N-068**	**P-68**	**12 7/8**	**-0.007**	**11 1/8**	**1 25/32**	**15 3/4**	**105.0**
23272K		**SNP-3272 x 13 7/16**	**S-3272**	**N-072**	**P-72**	**13 7/16**	**-0.007**	**11 27/64**	**1 25/32**	**16 ½**	**135.0**
		SNP-3272 x 13 ½	S-3272 x 13 ½			13 ½	-0.007				
23276K		**SNP-3276 x 13 15/16**	**S-3276**	**N-076**	**P-76**	**13 15/16**	**-0.007**	**11 7/8**	**1 29/32**	**17 3/4**	**145.0**
		SNP-3276 x 14	S-3276 x 14			14	-0.007				
23280K		**SNP-3280 x 15**	**S-3280**	**N-080**	**P-80**	**15**	**-0.007**	**12 21/32**	**2 1/16**	**18 ½**	**165.0**
23284K		**SNP-3284 x 15 3/4**	**S-3284**	**N-084**	**P-84**	**15 3/4**	**-0.007**	**13 19/64**	**2 1/16**	**19 5/16**	**170.0**
23288K		**SNP-3288 x 16 ½**	**S-3288**	**N-088**	**P-88**	**16 ½**	**-0.007**	**13 61/64**	**2 3/8**	**20 ½**	**260.0**
23292K		**SNP-3292 x 16 15/16**	**S-3292**	**N-092**	**P-92**	**16 15/16**	**-0.007**	**18 1/16**	**2 3/8**	**21 1/4**	**291.0**
23296K		**SNP-3296 x 17 15/16**	**S-3296**	**N-096**	**P-96**	**17 15/16**	**-0.007**	**15 5/32**	**2 3/8**	**22 1/16**	**335.0**
232/500K		**SNP-32/500 x 18 7/16**	**S-32/500**	**N-500**	**P-500**	**18 7/16**	**-0.007**	**16 ½**	**2 45/64**	**22 13/16**	**366.0**
232/530K		**SNP-32/530 x 18 15/16**	**S-32/530 x 18 15/16**	**N-530**	**P-530**	**18 15/16**	**-0.007**	**17 17/64**	**2 45/64**	**24 13/16**	**421.0**
		SNP-32/530 x 19 7/16	S-32/530 x 19 7/16			19 7/16	-0.007				
232/560K		**SNP-32/560 x 20 15/16**	**S-32/560**	**N-560**	**P-560**	**20 15/16**	**-0.007**	**17 59/64**	**2 61/64**	**25 9/16**	**478.0**
232/600K		**SNP-32/600 x 21 15/16**	**S-32/600**	**N-600**	**P-600**	**21 15/16**	**-0.007**	**18 55/64**	**2 61/64**	**27 9/16**	**613.0**
232/630K		**SNP-32/630 x 23 15/16**	**S-32/630**	**N-630**	**P-630**	**23 15/16**	**-0.007**	**19 51/64**	**2 61/64**	**28 3/4**	**657.0**
232/670K		**SNP-32/670 x 24 15/16**	**S-32/670**	**N-670**	**P-670**	**24 15/16**	**-0.007**	**21 1/32**	**3 9/64**	**30 11/16**	**891.0**
232/710K		**SNP-32/710 x 26 7/16**	**S-32/710**	**N-710**	**P-710**	**26 7/16**	**-0.007**	**21 15/16**	**3 37/64**	**32 11/16**	**979.0**
232/750K		**SNP-32/750 x 27 15/16**	**S-32/750**	**N-750**	**P-750**	**27 15/16**	**-0.007**	**22 63/64**	**3 37/64**	**34 1/4**	**1118.0**

[1]Bold shaft sizes are standard. When ordering non-standard accessories, specify shaft size.
[2]Tolerance range is from +0 to value listed.

Continued on next page.

INCH ACCESSORIES – PULL-TYPE SLEEVES – *continued*

SNW/SNP – PULL-TYPE SLEEVE, LOCKNUT, LOCKWASHER/LOCKPLATE ASSEMBLIES

- The table below shows dimensions for adapter assemblies and components used in the mounting of tapered bore bearings on shafts.
- SNW assembly consists of a sleeve, locknut and lockwasher.
- SNP assembly consists of a sleeve, locknut and lockplate.

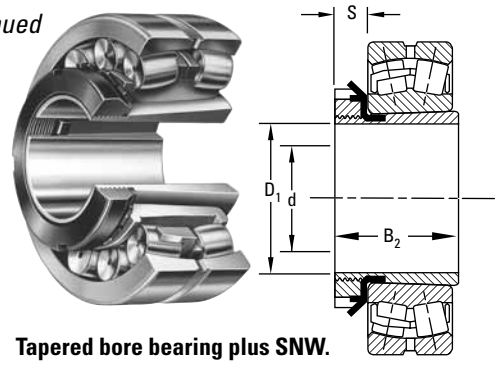

Tapered bore bearing plus SNW.

Continued from previous page.

Bearing No.[1]	Accessory Numbers				Shaft Dimensions		Adapter Dimensions			SNW/SNP Assembly Wt.
	Assembly	Sleeve	Locknut	Lockwasher Lockplate	Diameter d	Tolerance[2]	B_2	S	D_1	
					in.	in.	in.	in.	in.	lbs.
SERIES 231K										
23122K	**SNW-3122 x 3 15/16**	**S-22**	**N-022**	**W-022**	**3 15/16**	**-0.004**	**3 13/64**	**25/32**	**5 5/32**	**4.2**
23124K	**SNW-3124 x 4 3/16**	**S-24**	**N-024**	**W-024**	**4 3/16**	**-0.005**	**3 15/32**	**13/16**	**5 11/16**	**5.8**
23126K	**SNW-3126 x 4 7/16**	**S-26**	**N-026**	**W-026**	**4 7/16**	**-0.005**	**3 49/64**	**7/8**	**6 1/8**	**8.3**
23128K	**SNW-3128 x 4 15/16**	**S-28**	**N-028**	**W-028**	**4 15/16**	**-0.005**	**3 63/64**	**15/16**	**6 1/2**	**8.8**
23130K	**SNW-3130 x 5 3/16**	**S-30**	**N-030**	**W-030**	**5 3/16**	**-0.005**	**4 15/64**	**31/32**	**7 1/8**	**13.7**
23132K	**SNW-3132 x 5 7/16**	**S-32**	**N-032**	**W-032**	**5 7/16**	**-0.005**	**4 37/64**	**1 1/32**	**7 1/2**	**13.3**
23134K	**SNW-3134 x 5 15/16**	**S-34**	**N-034**	**W-034**	**5 15/16**	**-0.005**	**4 27/32**	**1 1/16**	**7 7/8**	**16.1**
23136K	**SNW-3136 x 6 7/16**	**S-36**	**N-036**	**W-036**	**6 7/16**	**-0.005**	**5 1/32**	**1 3/32**	**8 1/4**	**17.1**
23138K	**SNW-3138 x 6 15/16**	**S-38**	**N-038**	**W-038**	**6 15/16**	**-0.005**	**5 17/64**	**1 1/8**	**8 11/16**	**19.7**
23140K	**SNW-3140 x 7 3/16**	**S-40**	**N-040**	**W-040**	**7 3/16**	**-0.005**	**5 31/64**	**1 3/16**	**9 7/16**	**28.4**
23144K	**SNW-3144 x 7 15/16**	**S-44**	**N-044**	**W-044**	**7 15/16**	**-0.005**	**5 29/32**	**1 1/4**	**10 1/4**	**28.1**
23148K	**SNW-3144 x 8 15/16**	**S-48**	**N-048**	**P-48**	**8 15/16**	**-0.006**	**6 41/64**	**1 11/32**	**11 7/16**	**36.0**
23152K	**SNP-3152 x 9 7/16**	**S-52**	**N-052**	**P-52**	**9 7/16**	**-0.006**	**7 19/32**	**1 13/32**	**12 3/16**	**39.0**
	SNP-3152 x 9 1/2	S-52 x 9 1/2			9 1/2					
	SNP-3156 x 9 15/16	S-3156 x 9 15/16			9 15/16					
	SNP-3156 x 10	S-3156 x 10			10					
23156K	**SNP-3156 x 10 7/16**	**S-3156**	**N-056**	**P-56**	**10 7/16**	**-0.007**	**7 49/64**	**1 1/2**	**13**	**60.0**
	SNP-3156 x 10 1/2	S-3156 x 10 1/2			10 1/2					
23160K	**SNP-3160 x 10 15/16**	**S-3160**	**N-060**	**P-60**	**10 15/16**	**-0.007**	**8 3/8**	**1 9/16**	**14 3/16**	**65.0**
	SNP-3160 x 11	S-3160 x 11			11					
23164K	**SNP-3164 x 11 15/16**	**S-3164**	**N-064**	**P-64**	**11 15/16**	**-0.007**	**9 7/64**	**1 21/32**	**15**	**70.0**
	SNP-3164 x 12	S-3164 x 12			12					
	SNP-3168 x 12 1/2	S-3168 x 12 1/2			12 1/2					
23168K	**SNP-3168 x 12 7/8**	**S-3168**	**N-068**	**P-68**	**12 7/8**	**-0.007**	**9 25/32**	**1 25/32**	**15 3/4**	**93.5**
23172K	**SNP-3172 x 13 7/16**	**S-3172**	**N-072**	**P-72**	**13 7/16**	**-0.007**	**11 27/64**	**1 25/32**	**16 1/2**	**120.0**
	SNP-3172 x 13 1/2	S-3172 x 13 1/2			13 1/2					
23176K	**SNP-3176 x 13 15/16**	**S-3176**	**N-076**	**P-76**	**13 15/16**	**-0.007**	**11 7/8**	**1 29/32**	**17 3/4**	**125.0**
	SNP-3176 x 14	S-3176 x 14			14					
	SNP-3180 x 14 15/16	S-3180 x 14 15/16			14 15/16					
23180K	**SNP-3180 x 15**	**S-3180**	**N-080**	**P-80**	**15**	**-0.007**	**12 21/32**	**2 1/16**	**18 1/2**	**140.0**

[1]Bold shaft sizes are standard. When ordering non-standard accessories, specify shaft size.
[2]Tolerance range is from +0 to value listed.

Continued on next page.

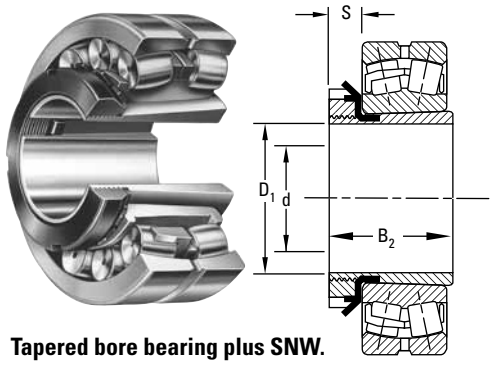

Tapered bore bearing plus SNW.

Continued from previous page.

Bearing No.[1]	Accessory Numbers				Shaft Dimensions		Adapter Dimensions			SNW/SNP Assembly Wt.
	Assembly	Sleeve	Locknut	Lockwasher Lockplate	Diameter d	Tolerance[2]	B_2	S	D_1	
					in.	in.	in.	in.	in.	lbs.
23184K	**SNP-3184 x 15 3/4**	**S-3184**	**N-084**	**P-84**	**15 3/4**	**-0.007**	**13 19/64**	**2 1/16**	**19 5/16**	**145.0**
23188K	**SNP-3188 x 16 1/2**	**S-3188**	**N-088**	**P-88**	**16 1/2**	**-0.007**	**13 61/64**	**2 3/8**	**20 1/2**	**229.0**
23192K	**SNP-3192 x 17**	**S-3192**	**N-092**	**P-92**	**17**	**-0.007**	**18 1/16**	**2 3/8**	**21 1/4**	**255.0**
23196K	**SNP-3196 x 18**	**S-3196**	**N-096**	**P-96**	**18**	**-0.007**	**15 5/32**	**2 3/8**	**22 1/16**	**293.0**
231/500K	**SNP-31/500 x 18 7/16**	**S-31/500**	**N-500**	**P-500**	**18 7/16**	**-0.007**	**16 1/2**	**2 45/64**	**22 13/16**	**315.0**
231/530K	**SNP-31/530 x 18 15/16**	**S-31/500 x 18 15/16**	**N-530**	**P-530**	**18 15/16**	**-0.007**	**17 17/64**	**2 45/64**	**24 13/16**	**355.0**
	SNP-31/530 x 19 7/16	S-31/530 x 19 7/16			19 7/16					
231/560K	**SNP-31/560 x 20 15/16**	**S-31/560**	**N-560**	**P-560**	**20 15/16**	**-0.007**	**17 59/64**	**2 61/64**	**25 9/16**	**408.0**
231/600K	**SNP-31/600 x 21 15/16**	**S-31/600**	**N-600**	**P-600**	**21 15/16**	**-0.007**	**18 55/64**	**2 61/64**	**27 9/16**	**516.0**
231/630K	**SNP-31/630 x 23 15/16**	**S-31/630**	**N-630**	**P-630**	**23 15/16**	**-0.007**	**19 51/64**	**2 61/64**	**28 3/4**	**556.0**
231/670K	**SNP-31/670 x 24 15/16**	**S-31/670**	**N-670**	**P-670**	**24 15/16**	**-0.007**	**21 1/32**	**3 9/64**	**30 11/16**	**759.0**
231/710K	**SNP-31/710 x 26 7/16**	**S-31/710**	**N-710**	**P-710**	**26 7/16**	**-0.007**	**21 15/16**	**3 37/64**	**32 11/16**	**833.0**
231/750K	**SNP-31/750 x 27 15/16**	**S-31/750**	**N-750**	**P-750**	**27 15/16**	**-0.007**	**22 63/64**	**3 37/64**	**34 1/4**	**997.0**
231/800K	**SNP-31/800 x 29 7/16**	**S-31/800**	**N-800**	**P-800**	**29 7/16**	**-0.007**	**19 1/64**	**3 37/64**	**36 1/4**	**1136.0**
231/850K	**SNP-31/850 x 31 7/16**	**S-31/850**	**N-850**	**P-850**	**31 7/16**	**-0.007**	**20 1/32**	**3 37/64**	**38 9/16**	**1303.0**

[1]Bold shaft sizes are standard. When ordering non-standard accessories, specify shaft size.
[2]Tolerance range is from +0 to value listed.

INCH ACCESSORIES – PUSH-TYPE SLEEVES

PUSH-TYPE REMOVABLE SLEEVE, LOCKNUT AND LOCKWASHER

The chart below shows dimensions for adapter assemblies and components used in the mounting of tapered bore bearings on shafts.

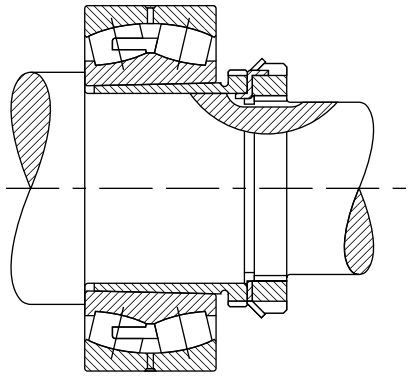

Bearing No.	Accessory Numbers				Shaft Dimensions		Adapter Dimensions			Removal Nut O.D.	Sleeve Wt.
	Sleeve	Locknut	Lockwasher Lockplate	Removal Nut	Diameter d	Tolerance[1]	Pitch Dia. B	L	a	C	
					mm in.	**mm** in.	**mm** in.	**mm** in.	**mm** in.	**mm** in.	**kg** lbs.
SERIES 222K											
22216K	SK-8022	N-14	W-14	AN-18	**70** 2.7559	**-0.10** -0.004	**88.19** 3.472	**50** 1.969	**3.50** 0.138	**118.39** 4.661	**0.5** 1.2
22217K	SK-8522	AN-15	W-15	AN-19	**75** 2.9528	**-0.10** -0.004	**93.35** 3.675	**52** 2.047	**3.50** 0.138	**125.55** 4.943	**0.6** 1.4
22218K	SK-9022	AN-16	W-16	AN-20	**80** 3.1496	**-0.10** -0.004	**98.12** 3.863	**53** 2.087	**3.50** 0.138	**131.90** 5.193	**0.6** 1.5
22219K	SK-9522	AN-17	W-17	AN-21	**85** 3.3465	**-0.10** -0.004	**103.28** 4.066	**57** 2.244	**4.00** 0.157	**138.25** 5.443	**0.8** 1.8
22220K	SK-10022	AN-18	W-18	AN-22	**90** 3.5433	**-0.10** -0.004	**109.12** 4.269	**59** 2.323	**4.00** 0.157	**145.39** 5.724	**0.9** 2.0
22222K	SK-11022	AN-20	W-20	ARN-22	**100** 3.9370	**-0.10** -0.004	**119.94** 4.722	**65** 2.559	**4.00** 0.157	**158.75** 6.250	**1.1** 2.4
22224K	SK-12022	AN-22	W-22	ARN-24	**110** 4.3307	**-0.13** -0.005	**130.28** 5.129	**72** 2.835	**4.00** 0.157	**174.63** 6.875	**1.4** 3.1
22226K	SK-13022	AN-22	W-22	ARN-26	**115** 4.5276	**-0.13** -0.005	**141.38** 5.566	**78** 3.071	**4.00** 0.15.7	**184.15** 7.250	**2.2** 5.0
22228K	SK-14022	AN-24	W-24	RN-28	**125** 4.9213	**-0.13** -0.005	**152.73** 6.013	**82** 3.228	**5.00** 0.197	**200.03** 7.875	**2.6** 5.8
22230K	SK-15022	AN-26	W-26	RN-30	**135** 5.3150	**-0.13** -0.005	**163.04** 6.419	**88** 3.465	**5.00** 0.197	**209.55** 8.250	**3.0** 6.8
22232K	SK-16022	AN-28	W-28	RN-32	**140** 5.5118	**-0.13** -0.005	**173.76** 6.841	**96** 3.780	**5.00** 0.197	**225.43** 8.875	**4.5** 9.9

[1]Tolerance range is from +0 to value listed.

Continued on next page.

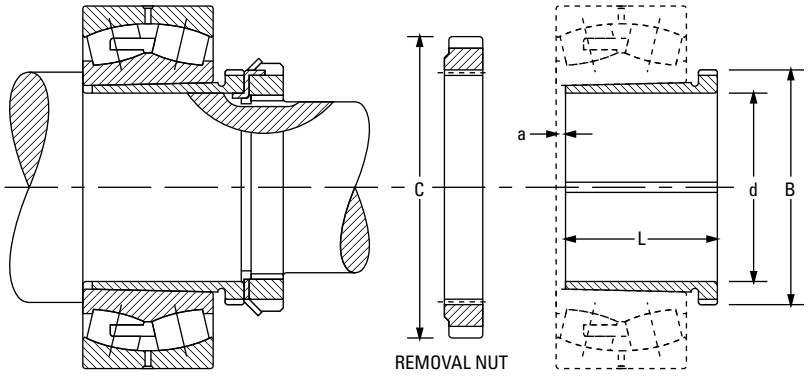

Tapered bore bearing mounted with push-type removable sleeve.

Continued from previous page.

Bearing No.	Accessory Numbers				Shaft Dimensions		Adapter Dimensions			Removal Nut O.D.	Sleeve Wt.
	Sleeve	Locknut	Lockwasher Lockplate	Removal Nut	Diameter d	Tolerance[1]	Pitch Dia. B	L	a	C	
					mm in.	**mm** in.	**mm** in.	**mm** in.	**mm** in.	**mm** in.	**kg** lbs.
22234K	SK-17022	AN-30	W-30	RN-34	**150** 5.9055	**-0.13** -0.005	**184.07** 7.247	**104** 4.095	**5.00** 0.197	**234.95** 9.250	**5.2** 11.5
22236K	SK-18022	AN-32	W-32	RN-36	**160** 6.2992	**-0.13** -0.005	**194.79** 7.669	**104** 4.095	**5.00** 0.197	**247.65** 9.750	**5.6** 12.5
22238K	SK-19022	AN-34	W-34	RN-38	**170** 6.6929	**-0.13** -0.005	**205.92** 8.107	**112** 4.409	**5.00** 0.197	**269.88** 10.625	**6.5** 14.5
22240K	SK-20022	AN-36	W-36	N-044	**180** 7.0866	**-0.13** -0.005	**217.02** 8.544	**118** 4.646	**5.00** 0.197	**279.53** 11.005	**7.4** 16.3
22244K	SK-22022	AN-40	W-40	N-048	**200** 7.8740	**-0.13** -0.005	**236.98** 9.330	**130** 5.118	**6.00** 0.236	**290.65** 11.443	**8.8** 19.6
22248K	SK-24022	N-44	W-44	N-052	**220** 8.6614	**-0.15** -0.006	**256.03** 10.080	**144** 5.669	**6.00** 0.236	**309.70** 12.193	**11.0** 24.3
22252K	SK-26022	N-048	P-48	N-056	**240** 9.4488	**-0.15** -0.006	**276.66** 10.892	**155** 6.102	**6.00** 0.236	**330.33** 13.005	**14.0** 30.9
22256K	SK-28022	N-052	P-52	RN-56	**260** 10.2362	**-0.15** -0.006	**301.27** 11.861	**155** 6.102	**8.00** 0.315	**425.45** 16.750	**15.0** 33.1
22260K	SK-30022	N-056	P-56	RN-60	**280** 11.0236	**-0.15** -0.006	**325.88** 12.830	**170** 6.693	**8.00** 0.315	**416.10** 16.382	**17.7** 39.2
22264K	SK-32022	N-060	P-60	RN-64	**300** 11.8110	**-0.15** -0.006	**345.72** 13.611	**180** 7.087	**10.00** 0.394	**431.8** 17.000	**21.0** 46.3

[1]Tolerance range is from +0 to value listed.

Continued on next page.

INCH ACCESSORIES – PUSH-TYPE SLEEVES – *continued*

PUSH-TYPE REMOVABLE SLEEVE, LOCKNUT AND LOCKWASHER

The chart below shows dimensions for adapter assemblies and components used in the tapered bore bearings on shafts.

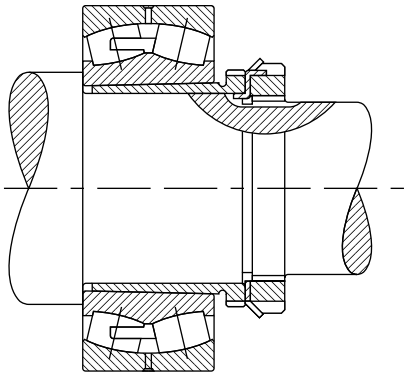

Continued from previous page.

Bearing No.	Accessory Numbers				Shaft Dimensions		Adapter Dimensions			Removal Nut O.D.	Sleeve Wt.
	Sleeve	Locknut	Lockwasher Lockplate	Removal Nut	Diameter d	Tolerance[1]	Pitch Dia. B	L	a	C	
					mm in.	**mm** in.	**mm** in.	**mm** in.	**mm** in.	**mm** in.	**kg** lbs.
SERIES 223K											
22308K	SK-4023	N-07	W-07	N-09	**35** 1.3780	**-0.08** -0.003	**43.94** 1.730	**40** 1.575	**3.00** 0.118	**64.41** 2.536	**0.1** 0.2
22309K	SK-4523	N-08	W-08	N-10	**40** 1.5748	**-0.08** -0.003	**49.02** 1.930	**44** 1.732	**3.00** 0.118	**68.40** 2.693	**0.1** 0.3
22310K	SK-5023	N-09	W-09	RN-10	**45** 1.7717	**-0.08** -0.003	**55.04** 2.167	**50** 1.969	**3.00** 0.118	**76.20** 3.000	**0.2** 0.4
22311K	SK-5523	N-10	W-10	RN-11	**50** 1.9685	**-0.08** -0.003	**60.20** 2.370	**54** 2.126	**3.00** 0.118	**81.76** 3.219	**0.2** 0.5
22312K	SK-6023	N-11	W-11	RN-12	**55** 2.1654	**-0.10** -0.004	**65.76** 2.589	**57** 2.244	**3.50** 0.138	**87.33** 3.438	**0.3** 0.6
22313K	SK-6523	N-12	W-12	AN-15	**60** 2.3622	**-0.10** -0.004	**73.10** 2.878	**61** 2.402	**3.50** 0.138	**98.55** 3.880	**0.3** 0.8
22314K	SK-7023	N-12	W-12	AN-16	**60** 2.3622	**-0.10** -0.004	**78.28** 3.082	**65** 2.559	**3.50** 0.138	**105.69** 4.161	**0.6** 1.5
22315K	SK-7523	N-13	W-13	AN-17	**65** 2.5591	**-0.10** -0.004	**83.44** 3.285	**69** 2.717	**3.50** 0.138	**112.04** 4.411	**0.8** 1.7
22316K	SK-8023	N-14	W-14	AN-18	**70** 2.7559	**-0.10** -0.004	**88.19** 3.472	**72** 2.835	**3.50** 0.138	**118.39** 4.661	**0.9** 2.0
22317K	SK-8523	AN-15	W-15	AN-19	**75** 2.9528	**-0.10** -0.004	**93.35** 3.675	**75** 2.953	**3.50** 0.138	**125.55** 4.943	**1.0** 2.2
22318K	SK-9023	AN-16	W-16	AN-20	**80** 3.1496	**-0.10** -0.004	**98.12** 3.863	**80** 3.150	**3.50** 0.138	**131.90** 5.193	**1.1** 2.5
22319K	SK-9523	AN-17	W-17	AN-21	**85** 3.3465	**-0.10** -0.004	**103.28** 4.066	**85** 3.346	**4.00** 0.157	**138.25** 5.443	**1.3** 2.9
22320K	SK-10023	AN-18	W-18	AN-22	**90** 3.5433	**-0.10** -0.004	**109.12** 4.269	**90** 3.543	**4.00** 0.157	**145.39** 5.724	**1.5** 3.3

[1]Tolerance range is from +0 to value listed.

Continued on next page.

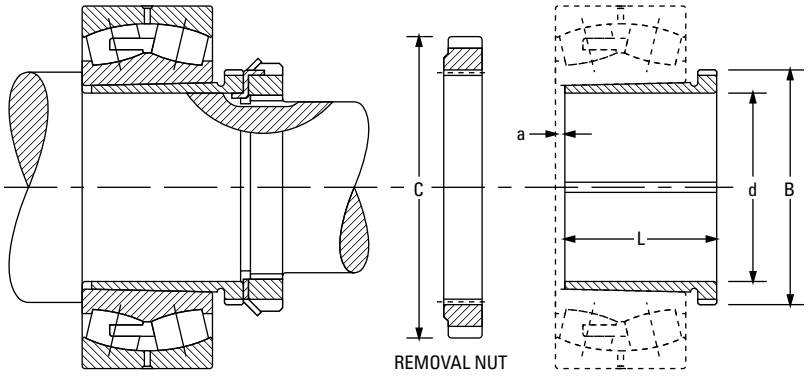

Tapered bore bearing mounted with push-type removable sleeve.

Continued from previous page.

Bearing No.	Accessory Numbers				Shaft Dimensions		Adapter Dimensions			Removal Nut O.D.	Sleeve Wt.
	Sleeve	Locknut	Lockwasher Lockplate	Removal Nut	Diameter d	Tolerance[1]	Pitch Dia. B	L	a	C	
					mm in.	**mm** in.	**mm** in.	**mm** in.	**mm** in.	**mm** in.	**kg** lbs.
22322K	SK-11023	AN-20	W-20	ARN-22	**100** 3.9370	**-0.10** -0.004	**119.94** 4.722	**98** 3.858	**4.00** 0.157	**158.75** 6.250	**1.9** 4.2
22324K	SK-12023	AN-22	W-22	ARN-24	**110** 4.3307	**-0.13** -0.005	**130.28** 5.129	**105** 4.134	**4.00** 0.157	**174.63** 6.875	**2.2** 5.0
22326K	SK-13023	AN-22	W-22	ARN-26	**115** 4.5276	**-0.13** -0.005	**141.38** 5.566	**115** 4.528	**4.00** 0.157	**184.15** 7.250	**3.6** 8.0
22328K	SK-14023	AN-24	W-24	RN-28	**125** 4.9213	**-0.13** -0.005	**152.73** 6.013	**125** 4.921	**5.00** 0.197	**200.03** 7.875	**4.3** 9.5
22330K	SK-15023	AN-26	W-26	RN-30	**135** 5.3150	**-0.13** -0.005	**163.04** 6.419	**135** 5.315	**5.00** 0.197	**209.55** 8.250	**5.1** 11.4
22332K	SK-16023	AN-28	W-28	RN-32	**140** 5.5118	**-0.13** -0.005	**173.76** 6.841	**140** 5.512	**6.00** 0.236	**225.43** 8.875	**7.0** 15.5
22334K	SK-17023	AN-30	W-30	RN-34	**150** 5.9055	**-0.13** -0.005	**184.07** 7.247	**146** 5.748	**6.00** 0.236	**234.95** 9.250	**7.8** 17.2
22336K	SK-18023	AN-32	W-32	RN-36	**160** 6.2992	**-0.13** -0.005	**194.79** 7.669	**154** 6.063	**6.00** 0.236	**247.65** 9.750	**9.1** 20.2
22338K	SK-19023	AN-34	W-34	RN-38	**170** 6.6929	**-0.13** -0.005	**205.92** 8.107	**160** 6.299	**7.00** 0.276	**269.88** 10.625	**10.0** 22.1
22340K	SK-20023	AN-36	W-36	N-044	**180** 7.0866	**-0.13** -0.005	**217.02** 8.544	**170** 6.693	**7.00** 0.276	**279.53** 11.005	**11.4** 25.2
22344K	SK-22023	AN-40	W-40	N-048	**200** 7.8740	**-0.13** -0.005	**236.98** 9.330	**181** 7.126	**8.00** 0.315	**290.65** 11.443	**13.3** 29.5
22348K	SK-24023	N-44	W-44	N-052	**220** 8.6614	**-0.15** -0.006	**256.03** 10.080	**189** 7.441	**8.00** 0.315	**309.70** 12.193	**15.5** 34.2
22352K	SK-26023	N-048	P-48	N-056	**240** 9.4488	**-0.15** -0.006	**276.66** 10.892	**200** 7.874	**8.00** 0.315	**330.33** 13.005	**18.2** 40.2
22356K	SK-28023	N-052	P-52	RN-56	**260** 10.2362	**-0.15** -0.006	**301.27** 11.861	**210** 8.268	**10.00** 0.394	**425.45** 16.75	**22.0** 48.5

[1]Tolerance range is from +0 to value listed.

INCH ACCESSORIES – LOCKNUTS AND LOCKWASHERS

- The chart below shows dimensions for locknuts and lockwashers used in the mounting of straight bore bearings on shafts.
- Other dimensions and tolerances related to shaft configurations are also shown.
- Dimensions are presented according to bearing bore size and are applicable to bearings in the various series (e.g., 222, 223, etc.).

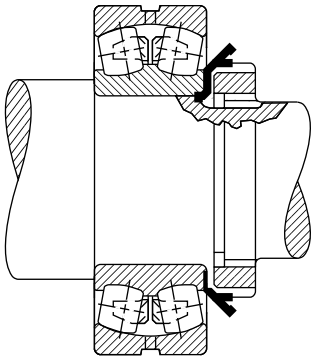

Bearing Bore	Locknut	Lockwasher	Threads Per Inch	Threads					
				Major Dia.		Pitch Dia.		Minor Dia.	Relief Dia. A
				Max.	Min.	Max.	Min.		
mm				**mm** in.	**mm** in.	**mm** in.	**mm** in.	**mm** in.	**mm** in.
35	N 07	W 07	18	**34.950** 1.3760	**34.740** 1.3678	**34.030** 1.3399	**33.930** 1.3359	**33.220** 1.3078	**32.820** 1.2922
40	N 08	W 08	18	**39.700** 1.5630	**39.490** 1.5548	**38.780** 1.5269	**38.670** 1.5224	**37.970** 1.4948	**37.570** 1.4792
45	N 09	W 09	18	**44.880** 1.7670	**44.670** 1.7588	**43.960** 1.7309	**43.850** 1.7264	**43.150** 1.6988	**42.750** 1.6832
50	N 10	W 10	18	**49.960** 1.9670	**49.750** 1.9588	**49.050** 1.9309	**48.930** 1.9264	**48.230** 1.8988	**47.830** 1.8832
55	N 11	W 11	18	**54.790** 2.1570	**54.580** 2.1488	**53.870** 2.1209	**53.740** 2.1158	**53.060** 2.0888	**52.660** 2.0732
60	N 12	W 12	18	**59.940** 2.3600	**59.740** 2.3518	**59.030** 2.3239	**58.900** 2.3188	**58.210** 2.2918	**57.820** 2.2762
65	N 13	W 13	18	**64.720** 2.5480	**64.510** 2.5398	**63.800** 2.5119	**63.670** 2.5068	**62.990** 2.4798	**62.590** 2.4642
70	N 14	W 14	18	**69.880** 2.7510	**69.670** 2.7428	**68.960** 2.7149	**68.830** 2.7098	**68.140** 2.6828	**67.750** 2.6672
75	AN 15	W 15	12	**74.500** 2.9330	**74.210** 2.9218	**73.120** 2.8789	**72.990** 2.8735	**71.900** 2.8308	**71.110** 2.7995
80	AN 16	W 16	12	**79.680** 3.1370	**79.400** 3.1258	**78.310** 3.0829	**78.160** 3.0770	**77.080** 3.0348	**76.290** 3.0035
85	AN 17	W 17	12	**84.840** 3.3400	**84.550** 3.3288	**83.460** 3.2859	**83.310** 3.2800	**82.240** 3.2378	**81.450** 3.2065
90	AN 18	W 18	12	**89.590** 3.5270	**89.300** 3.5158	**88.210** 3.4729	**88.020** 3.4655	**86.990** 3.4248	**86.200** 3.3935
95	AN 19	W 19	12	**94.740** 3.7300	**94.460** 3.7188	**93.370** 3.6759	**93.180** 3.6685	**92.150** 3.6278	**91.350** 3.5965
100	AN 20	W 20	12	**99.520** 3.9180	**99.230** 3.9068	**98.140** 3.8639	**97.960** 3.8565	**96.920** 3.8158	**96.130** 3.7845
105	AN 21	W 21	12	**104.700** 4.1220	**104.410** 4.1108	**103.320** 4.0679	**103.110** 4.0596	**102.100** 4.0198	**101.310** 3.9885
110	AN 22	W 22	12	**109.860** 4.3250	**109.570** 4.3138	**108.480** 4.2709	**108.270** 4.2626	**107.260** 4.2228	**106.460** 4.1915
120	AN 24	W 24	12	**119.790** 4.7160	**119.500** 4.7048	**118.410** 4.6619	**118.200** 4.6536	**117.190** 4.6138	**116.400** 4.5825

(1) See page D-76, table D-20 for suggested S-3 shaft limits.
(2) For W, L, H, S and M, tolerance is -0 to +0.4 mm, -0 to +1/64 in.

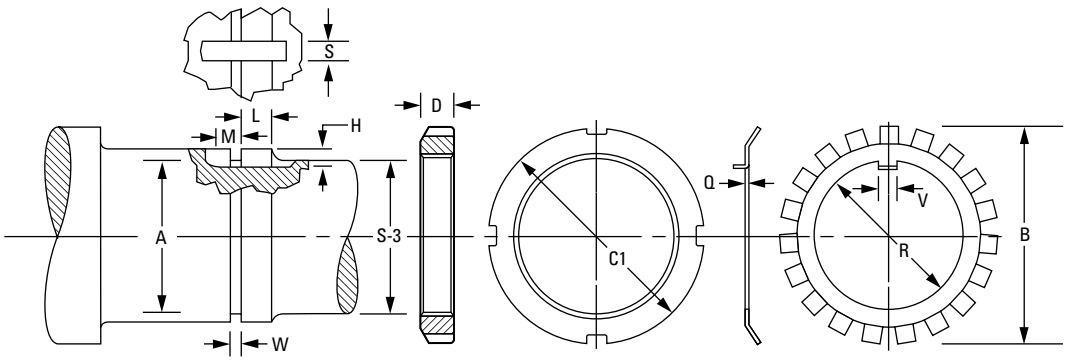

Shaft						Locknut		Lockwasher			
S-3[1]	W[2]	L[2]	H[2]	S[2]	M[2]	C1	D	Q	R	B	V
mm in.	**mm** in.	**mm** in.	**mm** in.	**mm** in.	**mm** in.	**mm** in.	**mm** in.	**mm** in.	**mm** in.	**mm** in.	**mm** in.
31.750 1 1/4	**2.4** 3/32	**12.7** 1/2	**2.4** 3/32	**4.8** 3/16	**3.2** 1/8	**52.39** 2 1/16	**11.40** 0.448	**1.30** 0.050	**36.00** 1.416	**57.20** 2 1/4	**4.50** 0.176
36.510 1 7/16	**3.2** 1/8	**13.5** 17/32	**2.4** 3/32	**7.9** 5/16	**3.2** 1/8	**57.15** 2 1/4	**11.40** 0.448	**1.50** 0.058	**40.70** 1.603	**62.70** 2 15/32	**7.40** 0.290
42.860 1 11/16	**3.2** 1/8	**13.5** 17/32	**2.4** 3/32	**7.9** 5/16	**4.0** 5/32	**64.30** 2 17/32	**11.40** 0.448	**1.50** 0.058	**46.20** 1.817	**69.50** 2 47/64	**7.40** 0.290
47.630 1 7/8	**3.2** 1/8	**15.1** 19/32	**2.4** 3/32	**7.9** 5/16	**4.0** 5/32	**68.30** 2 11/16	**13.00** 0.510	**1.50** 0.058	**51.20** 2.017	**74.20** 2 59/64	**7.40** 0.290
52.390 2 1/16	**3.2** 1/8	**15.1** 19/32	**3.2** 1/8	**7.9** 5/16	**4.0** 5/32	**75.40** 2 31/32	**13.00** 0.510	**1.60** 0.063	**56.10** 2.207	**79.00** 3 7/64	**7.40** 0.290
57.150 2 1/4	**3.2** 1/8	**15.9** 5/8	**3.2** 1/8	**7.9** 5/16	**4.0** 5/32	**80.20** 3 5/32	**13.70** 0.541	**1.60** 0.063	**61.60** 2.425	**85.00** 3 11/32	**7.40** 0.290
61.910 2 7/16	**3.2** 1/8	**16.7** 21/32	**3.2** 1/8	**7.9** 5/16	**4.0** 5/32	**85.70** 3 3/8	**14.60** 0.573	**1.60** 0.063	**66.40** 2.613	**90.90** 3 37/64	**7.40** 0.290
66.680 2 5/8	**3.2** 1/8	**16.7** 21/32	**3.2** 1/8	**7.9** 5/16	**6.4** 1/4	**92.10** 3 5/8	**14.60** 0.573	**1.60** 0.063	**71.50** 2.816	**97.20** 3 53/64	**7.40** 0.290
71.440 2 13/16	**4.0** 5/32	**17.5** 11/16	**3.2** 1/8	**7.9** 5/16	**6.4** 1/4	**98.40** 3 7/8	**15.30** 0.604	**1.60** 0.072	**76.30** 3.003	**104.40** 4 7/64	**7.40** 0.290
76.200 3	**4.0** 5/32	**17.5** 11/16	**3.2** 1/8	**9.5** 3/8	**6.4** 1/4	**105.60** 4 5/32	**15.30** 0.604	**1.80** 0.072	**81.50** 3.207	**111.10** 4 3/8	**9.00** 0.353
80.960 3 3/16	**4.0** 5/32	**16.7** 21/32	**3.2** 1/8	**9.5** 3/8	**6.4** 1/4	**111.90** 4 13/32	**16.10** 0.635	**1.80** 0.072	**87.00** 3.425	**117.50** 4 5/8	**9.00** 0.353
85.730 3 3/8	**4.0** 5/32	**20.6** 13/16	**4.0** 5/32	**9.5** 3/8	**6.4** 1/4	**118.30** 4 21/32	**17.70** 0.698	**2.40** 0.094	**91.70** 3.612	**125.40** 4 15/16	**9.00** 0.353
90.490 3 9/16	**4.0** 5/32	**21.4** 27/32	**4.0** 5/32	**9.5** 3/8	**6.4** 1/4	**125.40** 4 15/16	**18.50** 0.729	**2.40** 0.094	**97.30** 3.830	**132.60** 5 7/32	**9.00** 0.353
96.840 3 13/16	**4.0** 5/32	**22.2** 7/8	**4.0** 5/32	**9.5** 3/8	**7.9** 5/16	**131.80** 5 3/16	**19.30** 0.760	**2.40** 0.094	**102.10** 4.018	**139.70** 5 1/2	**9.00** 0.353
100.010 3 15/16	**4.0** 5/32	**22.2** 7/8	**4.0** 5/32	**9.5** 3/8	**7.9** 5/16	**138.10** 5 7/16	**19.30** 0.760	**2.40** 0.094	**107.20** 4.222	**144.90** 5 45/64	**9.00** 0.353
106.360 4 3/16	**4.0** 5/32	**23** 29/32	**4.8** 3/16	**9.5** 3/8	**7.9** 5/16	**145.30** 5 23/32	**20.10** 0.791	**3.20** 0.125	**112.40** 4.425	**154.00** 6 1/16	**9.00** 0.353
115.890 4 9/16	**4.0** 5/32	**23.8** 15/16	**4.8** 3/16	**9.5** 3/8	**7.9** 5/16	**155.60** 6 1/8	**20.90** 0.823	**3.20** 0.125	**122.70** 4.831	**164.30** 6 15/32	**9.00** 0.353

[1]See page D-76, table D-20 for suggested S-3 shaft limits.
[2]For W, L, H, S and M, tolerance is -0 to +0.4 mm, -0 to +1/64 in.

Continued on next page.

INCH ACCESSORIES – LOCKNUTS AND LOCKWASHERS – continued

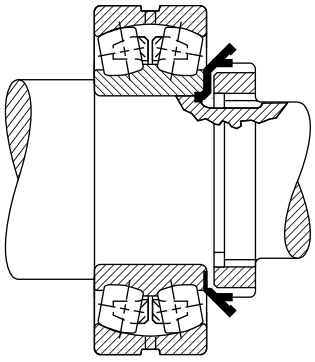

- The chart below shows dimensions for locknuts and lockwashers used in the mounting of straight bore bearings on shafts.
- Other dimensions and tolerances related to shaft configurations are also shown.
- Dimensions are presented according to bearing bore size and are applicable to bearings in the various series (e.g., 222 and 223, etc.).

Continued from previous page.

Bearing Bore	Locknut	Lockwasher	Threads Per Inch	Threads					
				Major Dia.		Pitch Dia.		Minor Dia.	Relief Dia. A
				Max.	Min.	Max.	Min.		
mm				**mm** in.	**mm** in.	**mm** in.	**mm** in.	**mm** in.	**mm** in.
130	AN 26	W 26	12	**129.690** 5.1060	**129.410** 5.0948	**128.320** 5.0519	**128.110** 5.0436	**127.100** 5.0038	**126.300** 4.9725
140	AN 28	W 28	12	**139.620** 5.4970	**139.340** 5.4858	**138.250** 5.4429	**138.040** 5.4346	**137.030** 5.3948	**136.230** 5.3635
150	AN 30	W 30	12	**149.560** 5.8880	**149.270** 5.8768	**148.180** 5.8339	**147.970** 5.8256	**146.960** 5.7858	**146.160** 5.7545
160	AN 32	W 32	8	**159.610** 6.2840	**159.230** 6.2688	**157.550** 6.2028	**157.320** 6.1937	**155.720** 6.1306	**154.920** 6.0993
170	AN 34	W 34	8	**169.140** 6.6590	**168.750** 6.6438	**167.080** 6.5778	**166.850** 6.5687	**165.240** 6.5056	**164.450** 6.4743
180	AN 36	W 36	8	**179.480** 7.0660	**179.090** 7.0508	**177.410** 6.9848	**177.180** 6.9757	**175.580** 6.9126	**174.790** 6.8813
190	AN 38	W 38	8	**189.790** 7.4720	**189.400** 7.4568	**187.730** 7.3908	**187.500** 7.3817	**185.890** 7.3186	**185.100** 7.2873
200	AN 40	W 40	8	**199.310** 7.8470	**198.930** 7.8318	**197.250** 7.7658	**196.960** 7.7544	**195.420** 7.6936	**194.620** 7.6623
220	N 044	W 44	8	**219.150** 8.6280	**218.770** 8.6128	**217.090** 8.5468	**216.780** 8.5347	**215.250** 8.4746	**214.460** 8.4433

(1)See page D-76, table D-20 for suggested S-3 shaft limits.
(2)For W, L, H, S and M, tolerance is -0 to +0.4 mm, -0 to +1/64 in.

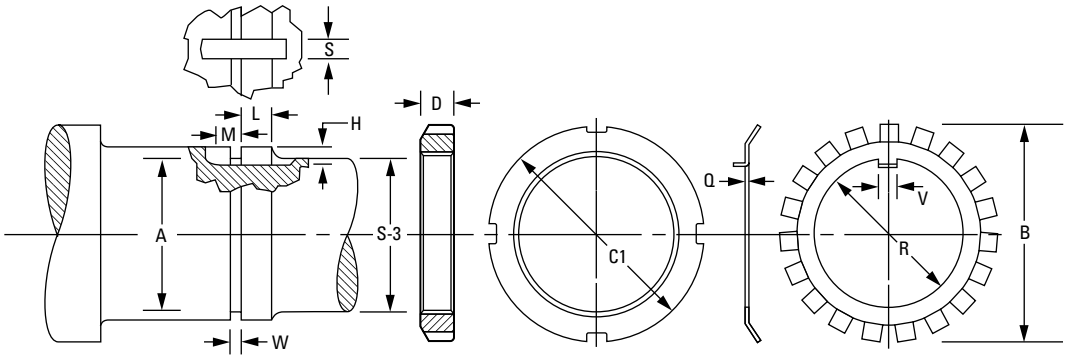

Shaft						Locknut		Lockwasher			
S-3[1]	W[2]	L[2]	H[2]	S[2]	M[2]	C1	D	Q	R	B	V
mm in.	**mm** in.	**mm** in.	**mm** in.	**mm** in.	**mm** in.	**mm** in.	**mm** in.	**mm** in.	**mm** in.	**mm** in.	**mm** in.
125.410 4 15/16	**4.0** 5/32	**25.4** 1	**4.8** 3/16	**12.7** 1/2	**7.9** 5/16	**171.50** 6 3/4	**22.50** 0.885	**3.20** 0.125	**132.70** 5.226	**178.60** 7 1/32	**11.10** 0.435
134.940 5 5/16	**4.0** 5/32	**27** 1 1/16	**4.8** 3/16	**15.9** 5/8	**7.9** 5/16	**180.20** 7 3/32	**24.10** 0.948	**3.20** 0.125	**142.70** 5.617	**188.90** 7 7/16	**15.00** 0.590
146.050 5 3/4	**4.0** 5/32	**28.6** 1 1/8	**5.6** 7/32	**15.9** 5/8	**9.5** 3/8	**195.30** 7 11/16	**24.90** 0.979	**4.00** 0.156	**152.90** 6.018	**204.80** 8 1/16	**15.00** 0.590
153.990 6 1/16	**6.4** 1/4	**30.2** 1 3/16	**6.0** 15/64	**15.9** 5/8	**9.5** 3/8	**204.80** 8 1/16	**26.40** 1.041	**4.00** 0.156	**163.20** 6.424	**214.30** 8 7/16	**15.00** 0.590
163.510 6 7/16	**6.4** 1/4	**31** 1 7/32	**6.0** 15/64	**19.1** 3/4	**9.5** 3/8	**219.90** 8 21/32	**27.30** 1.073	**4.00** 0.156	**172.70** 6.799	**230.20** 9 1/16	**18.20** 0.715
174.630 6 7/8	**6.4** 1/4	**31.8** 1 1/4	**6.0** 15/64	**19.1** 3/4	**9.5** 3/8	**230.20** 9 1/16	**28.00** 1.104	**4.00** 0.156	**183.00** 7.206	**239.70** 9 7/16	**18.20** 0.715
184.150 7 1/4	**6.4** 1/4	**32.5** 1 9/32	**6.0** 15/64	**19.1** 3/4	**9.5** 3/8	**240.50** 9 15/32	**28.80** 1.135	**4.00** 0.156	**193.30** 7.612	**250.80** 9 7/8	**18.20** 0.715
193.680 7 5/8	**6.4** 1/4	**34.1** 1 11/32	**6.0** 15/64	**22.2** 7/8	**9.5** 3/8	**250.00** 9 27/32	**30.40** 1.198	**4.00** 0.156	**203.60** 8.017	**261.90** 10 5/16	**21.30** 0.840
211.140 8 5/16	**6.4** 1/4	**34.9** 1 3/8	**9.5** 3/8	**27.0** 1 1/16	**9.5** 3/8	**279.40** 11	**31.80** 1.250	**3.20** 0.125	**221.10** 8.703	**290.50** 11 7/16	**23.90** 0.940

[1]See page D-76, table D-20 for suggested S-3 shaft limits.
[2]For W, L, H, S and M, tolerance is -0 to +0.4 mm, -0 to +1/64 in.

INCH ACCESSORIES – LOCKNUTS AND LOCKPLATES

- The chart below shows dimensions for locknuts and lockplates used in the mounting of straight bore bearings on shafts.
- Other dimensions and tolerances related to shaft configurations are also shown.
- Dimensions are presented according to bearing bore size and are applicable to bearings in the various series (e.g., 222, 223, etc.).

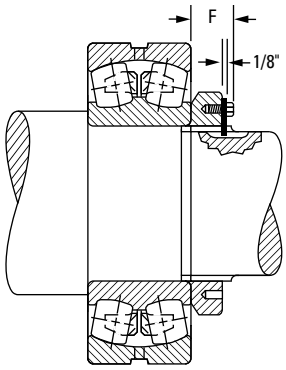

Bearing Bore	Locknut	Lockplate	Threads Per Inch	Threads					
				Major Dia.		Pitch Dia.		Minor Dia.	Relief Dia. A
				Max.	Min.	Max.	Min.		
mm				**mm** in.	**mm** in.	**mm** in.	**mm** in.	**mm** in.	**mm** in.
240	N 048	P 48	6	**239.83** 9.442	**239.31** 9.4218	**237.08** 9.3337	**236.76** 9.3213	**234.63** 9.2374	**233.44** 9.1905
260	N 052	P 52	6	**258.88** 10.192	**258.36** 10.1718	**256.13** 10.0837	**255.8** 10.0707	**253.68** 9.9874	**252.49** 9.9405
280	N 056	P 56	6	**279.50** 11.004	**278.99** 10.9838	**276.75** 10.8957	**276.42** 10.8827	**274.31** 10.7994	**273.11** 10.7525
300	N 060	P 60	6	**299.34** 11.785	**298.83** 11.7648	**296.59** 11.6767	**296.26** 11.6637	**294.14** 11.5804	**292.95** 11.5335
320	N 064	P 64	6	**319.08** 12.562	**318.56** 12.5418	**316.32** 12.4537	**315.98** 12.4402	**313.88** 12.3574	**312.69** 12.3105
340	N 068	P 68	5	**337.90** 13.303	**337.49** 13.287	**335.36** 13.203	**334.95** 13.187	**332.31** 13.083	**331.11** 13.036
360	N 072	P 72	5	**359.00** 14.134	**358.60** 14.118	**356.46** 14.034	**356.06** 14.018	**353.42** 13.914	**352.22** 13.867
380	N 076	P 76	5	**378.99** 14.921	**378.59** 14.905	**376.45** 14.821	**376.05** 14.805	**373.41** 14.701	**372.21** 14.654
400	N 080	P 80	5	**399.01** 15.709	**398.60** 15.693	**396.47** 15.609	**396.06** 15.593	**393.42** 15.489	**392.23** 15.442
420	N 084	P 84	5	**419.00** 16.496	**418.59** 16.480	**416.46** 16.396	**416.05** 16.380	**413.41** 16.276	**412.22** 16.229
440	N 088	P 88	5	**438.99** 17.283	**438.58** 17.267	**436.45** 17.183	**436.05** 17.167	**433.40** 17.063	**432.21** 17.016
460	N 092	P 92	5	**459.00** 18.071	**458.60** 18.055	**456.46** 17.971	**456.06** 17.955	**453.42** 17.851	**452.22** 17.804
480	N 096	P 96	5	**478.99** 18.858	**478.59** 18.842	**476.45** 18.758	**476.05** 18.742	**473.41** 18.638	**472.21** 18.591

(1) See page D-76, table D-20 for suggested S-3 shaft limits.
(2) C is outer-ring width that may be obtained from bearing dimension tables.
(3) For L, H, S and M, tolerance is -0 to +1/64 in., -0 to + 0.4 mm.

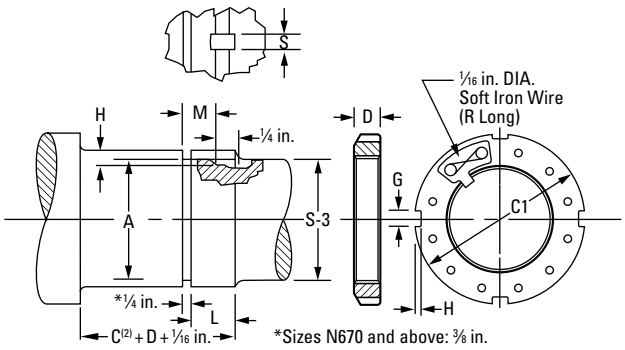

Shaft					Locknut/Lockplate					
S-3(1)	L(3)	H(3)	S(3)	M(3)	C1	D	G	H ±0.25 mm ±0.010 in.	R	F
mm in.	mm in.	mm in.	mm in.	mm in.	mm in.	mm in.	mm in.	mm in.	mm in.	mm in.
233.36 9 3/16	**42.86** 1 11/16	**11.1** 7/16	**28.6** 1 1/8	**34.9** 1 3/8	**290.5** 11 7/16	**34.1** 1 11/32	**22.48** 0.885	**9.5** 3/8	**203.2** 8	**43.26** 1 45/64
252.41 9 15/16	**45.24** 1 25/32	**11.1** 7/16	**30.2** 1 3/16	**37.3** 1 15/32	**309.6** 12 3/16	**35.7** 1 13/32	**22.48** 0.885	**9.5** 3/8	**228.6** 9	**44.85** 1 49/64
273.05 10 3/4	**47.63** 1 7/8	**11.1** 7/16	**31.8** 1 1/4	**39.7** 1 9/16	**330.2** 13	**38.1** 1 1/2	**25.65** 1.010	**9.5** 3/8	**228.6** 9	**47.23** 1 55/64
292.1 11 1/2	**49.21** 1 15/16	**11.1** 7/16	**34.9** 1 3/8	**41.3** 1 5/8	**360.4** 14 3/16	**39.7** 1 9/16	**25.65** 1.010	**12.7** 1/2	**254.0** 10	**50.01** 1 31/32
312.74 12 5/16	**51.59** 2 1/32	**11.1** 7/16	**36.5** 1 7/16	**43.7** 1 23/32	**381.0** 15	**42.1** 1 21/32	**25.65** 1.010	**12.7** 1/2	**254.0** 10	**52.39** 2 1/16
331.79 13 1/16	**56.36** 2 7/32	**11.1** 7/16	**38.1** 1 1/2	**48.4** 1 29/32	**400.1** 15 3/4	**45.2** 1 25/32	**25.65** 1.010	**12.7** 1/2	**279.4** 11	**55.56** 2 3/16
350.84 13 13/16	**56.36** 2 7/32	**12.7** 1/2	**38.1** 1 1/2	**48.4** 1 29/32	**419.1** 16 1/2	**45.2** 1 25/32	**32.00** 1.260	**12.7** 1/2	**279.4** 11	**55.56** 2 3/16
371.48 14 5/8	**59.53** 2 11/32	**12.7** 1/2	**38.1** 1 1/2	**51.59** 2 1/32	**450.9** 17 3/4	**48.4** 1 29/32	**32.00** 1.260	**15.1** 19/32	**304.8** 12	**61.12** 2 13/32
390.53 15 3/8	**63.50** 2 1/2	**12.7** 1/2	**41.3** 1 5/8	**55.6** 2 3/16	**469.9** 18 1/2	**52.4** 2 1/16	**32.00** 1.260	**15.1** 19/32	**330.2** 13	**65.09** 2 9/16
411.16 16 3/16	**63.50** 2 1/2	**12.7** 1/2	**41.3** 1 5/8	**55.6** 2 3/16	**490.5** 19 5/16	**52.4** 2 1/16	**35.18** 1.385	**15.1** 19/32	**330.2** 13	**65.09** 2 9/16
431.80 17	**71.44** 2 13/16	**12.7** 1/2	**46.0** 1 13/16	**63.50** 2 1/2	**520.7** 20 1/2	**60.3** 2 3/8	**35.18** 1.385	**15.1** 19/32	**355.6** 14	**75.41** 2 31/32
450.85 17 3/4	**71.44** 2 13/16	**12.7** 1/2	**46.0** 1 13/16	**63.50** 2 1/2	**539.8** 21 1/4	**60.3** 2 3/8	**35.18** 1.385	**15.1** 19/32	**406.4** 16	**75.41** 2 31/32
469.9 18 1/2	**71.44** 2 13/16	**12.7** 1/2	**46.0** 1 13/16	**63.50** 2 1/2	**560.4** 22 1/16	**60.3** 2 3/8	**38.35** 1.510	**15.1** 19/32	**406.4** 16	**75.41** 2 31/32

(1)See page D-76, table D-20 for suggested S-3 shaft limits.
(2)C is outer-ring width that may be obtained from bearing dimension tables.
(3)For L, H, S and M, tolerance is -0 to +1/64 in., -0 to + 0.4 mm.

Continued on next page.

INCH ACCESSORIES – LOCKNUTS AND LOCKPLATES – continued

- The chart below shows dimensions for locknuts and lockplates used in the mounting of straight bore bearings on shafts.
- Other dimensions and tolerances related to shaft configurations are also shown.
- Dimensions are presented according to bearing bore size and are applicable to bearings in the various series (e.g., 222, 223, etc.).

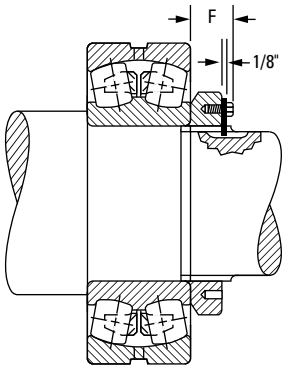

Continued from previous page.

Bearing Bore	Locknut	Lockplate	Threads Per Inch	Threads					
				Major Dia.		Pitch Dia.		Minor Dia.	Relief Dia. A
				Max.	Min.	Max.	Min.		
mm				**mm** in.	**mm** in.	**mm** in.	**mm** in.	**mm** in.	**mm** in.
500	N 500	P 500	5	**499.01** 19.646	**498.60** 19.630	**496.47** 19.546	**496.06** 19.530	**493.42** 19.426	**492.23** 19.379
530	N 530	P 530	4	**529.01** 20.827	**528.50** 20.807	**525.83** 20.702	**525.32** 20.682	**522.15** 20.557	**520.55** 20.494
560	N 560	P 560	4	**559.00** 22.008	**558.50** 21.988	**555.83** 21.883	**555.32** 21.863	**552.15** 21.738	**550.55** 21.675
600	N 600	P 600	4	**599.01** 23.583	**598.50** 23.563	**595.83** 23.458	**595.33** 23.438	**592.15** 23.313	**590.55** 23.250
630	N 630	P 630	4	**629.01** 24.764	**628.50** 24.744	**625.83** 24.639	**625.32** 24.619	**622.15** 24.494	**520.55** 24.431
670	N 670	P 670	4	**669.01** 26.339	**668.50** 26.319	**665.84** 26.214	**665.33** 26.194	**662.15** 26.069	**660.55** 26.006
710	N 710	P 710	3	**709.02** 27.914	**708.33** 27.887	**704.77** 27.747	**704.09** 27.720	**700.02** 27.56	**698.42** 27.497
750	N 750	P 750	3	**749.02** 29.489	**748.34** 29.462	**744.78** 29.322	**744.09** 29.295	**740.03** 29.135	**738.43** 29.072
800	N 800	P 800	3	**799.01** 31.457	**798.32** 31.430	**794.77** 31.290	**794.08** 31.263	**790.02** 31.103	**788.42** 31.040
850	N 850	P 850	3	**849.02** 33.426	**848.34** 33.399	**844.78** 33.259	**844.09** 33.232	**840.03** 33.072	**838.43** 33.009
900	N 900	P 900	3	**899.01** 35.394	**898.32** 35.367	**894.77** 35.227	**894.08** 35.200	**890.02** 35.040	**888.42** 34.977
950	N 950	P 950	3	**949.02** 37.363	**948.33** 37.336	**944.78** 37.196	**944.09** 37.169	**940.03** 37.009	**938.43** 36.946

(1)See page D-76, table D-20 for suggested S-3 shaft limits.
(2)C is outer-ring width that may be obtained from bearing dimension tables.
(3)For L, H, S and M, tolerance is -0 to +1/64 in., -0 to + 0.4 mm.

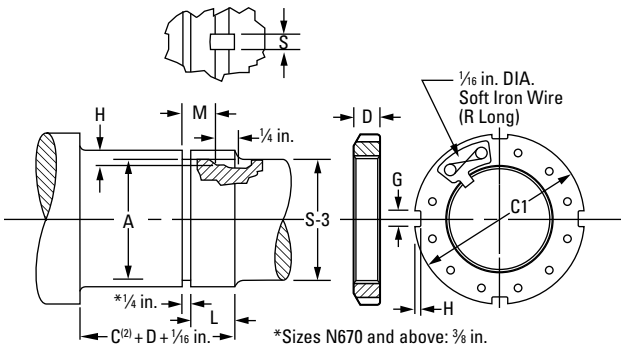

Shaft					Locknut/Lockplate					
S-3(1)	L(3)	H(3)	S(3)	M(3)	C1	D	G	H ±0.25 mm ±0.010 in.	R	F
mm in.	**mm** in.	**mm** in.	**mm** in.	**mm** in.	**mm** in.	**mm** in.	**mm** in.	**mm** in.	**mm** in.	**mm** in.
489.0 19 ¼	**79.4** 3 ⅛	**12.7** ½	**46.0** 1 13/16	**71.4** 2 13/16	**579.4** 22 13/16	**68.3** 2 11/16	**38.35** 1.510	**15.1** 19/32	**406.4** 16	**83.3** 3 9/32
517.5 20 ⅜	**79.4** 3 ⅛	**12.7** ½	**46.0** 1 13/16	**71.4** 2 13/16	**630.2** 24 13/16	**68.3** 2 11/16	**41.53** 1.635	**20.6** 13/16	**425.5** 16 ¾	**83.3** 3 9/32
549.3 21 ⅝	**85.7** 3 ⅜	**12.7** ½	**46.0** 1 13/16	**77.8** 3 1/16	**649.3** 25 9/16	**74.6** 2 15/16	**41.53** 1.635	**20.6** 13/16	**476.3** 18 ¾	**89.7** 3 17/32
587.4 23 ⅛	**85.7** 3 ⅜	**12.7** ½	**46.0** 1 13/16	**77.8** 3 1/16	**700.1** 27 9/16	**74.6** 2 15/16	**41.53** 1.635	**20.6** 13/16	**508.0** 20	**89.7** 3 17/32
619.1 24 ⅜	**85.7** 3 ⅜	**12.7** ½	**50.8** 2	**77.8** 3 1/16	**730.3** 28 ¾	**74.6** 2 15/16	**47.88** 1.885	**20.6** 13/16	**520.7** 20 ½	**92.1** 3 ⅝
657.2 25 ⅞	**90.5** 3 9/16	**12.7** ½	**50.8** 2	**82.6** 3 ¼	**779.5** 30 11/16	**79.4** 3 ⅛	**47.88** 1.885	**20.6** 13/16	**546.1** 21 ½	**96.8** 3 13/16
695.3 27 ⅜	**101.6** 4	**15.9** ⅝	**50.8** 2	**93.7** 3 11/16	**830.3** 32 11/16	**90.5** 3 9/16	**51.30** 2.020	**25.4** 1	**571.5** 22 ½	**108.0** 4 ¼
736.6 29	**101.6** 4	**15.9** ⅝	**50.8** 2	**93.7** 3 11/16	**870.0** 34 ¼	**90.5** 3 9/16	**57.66** 2.270	**25.4** 1	**584.2** 23	**108.0** 4 ¼
787.4 31	**101.6** 4	**15.9** ⅝	**50.8** 2	**93.7** 3 11/16	**920.8** 36 ¼	**90.5** 3 9/16	**57.66** 2.270	**25.4** 1	**616.0** 24 ¼	**108.0** 4 ¼
835.0 32 ⅞	**101.6** 4	**15.9** ⅝	**50.8** 2	**93.7** 3 11/16	**979.5** 38 9/16	**90.5** 3 9/16	**64.01** 2.520	**25.4** 1	**647.7** 25 ½	**108.0** 4 ¼
885.8 34 ⅞	**111.1** 4 ⅜	**15.9** ⅝	**50.8** 2	**103.2** 4 1/16	**1030.3** 40 9/16	**100.0** 3 15/16	**64.01** 2.520	**25.4** 1	**666.8** 26 ¼	**117.5** 4 ⅝
933.5 36 ¾	**114.3** 4 ½	**19.1** ¾	**50.8** 2	**108** 4 ¼	**1092.2** 43	**100.0** 3 15/16	**64.01** 2.520	**25.4** 1	**692.2** 27 ¼	**117.5** 4 ⅝

(1)See page D-76, table D-20 for suggested S-3 shaft limits.
(2)C is outer-ring width that may be obtained from bearing dimension tables.
(3)For L, H, S and M, tolerance is -0 to +1/64 in., -0 to + 0.4 mm.

INCH HMVC HYDRAULIC NUTS

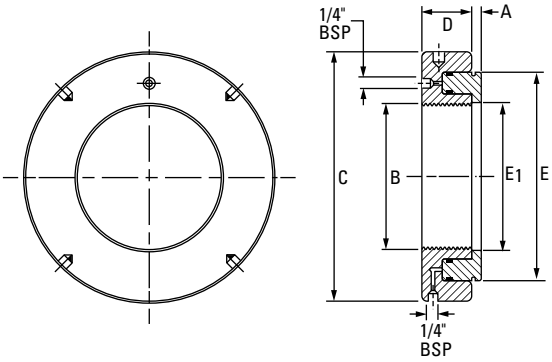

Part No.	Major Dia. B	Threads Per Inch	Dimensions					Piston Length of Travel	Piston Area	Assembly Wt.
			C	D	E	E_1	A			
	in.		in.	in.	in.	in.	in.	in.	in.²	lbs.
HMVC - 10	1.967	18	4.488	1.496	3.386	2.008	0.157	0.197	4.5	5.5
HMVC - 12	2.360	18	4.921	1.496	3.701	2.402	0.197	0.197	5.0	6.2
HMVC - 13	2.548	18	5.315	1.496	3.976	2.598	0.197	0.197	5.4	6.6
HMVC - 14	2.751	18	5.512	1.496	4.213	2.795	0.197	0.197	6.0	7.3
HMVC - 15	2.933	12	5.709	1.496	4.409	2.992	0.197	0.197	6.3	7.7
HMVC - 16	3.137	12	5.906	1.496	4.606	3.189	0.197	0.197	6.5	8.4
HMVC - 17	3.340	12	6.102	1.496	4.803	3.386	0.197	0.197	6.8	8.6
HMVC - 18	3.527	12	6.299	1.496	5.000	3.583	0.197	0.197	7.4	9.0
HMVC - 19	3.730	12	6.496	1.496	5.236	3.780	0.197	0.197	7.7	9.7
HMVC - 20	3.918	12	6.693	1.496	5.433	3.976	0.236	0.197	8.1	10.0
HMVC - 22	4.325	12	7.087	1.496	5.866	4.370	0.236	0.197	8.8	12.5
HMVC - 24	4.716	12	7.480	1.496	6.260	4.764	0.236	0.197	9.5	11.7
HMVC - 26	5.106	12	7.874	1.496	6.693	5.157	0.236	0.197	10.1	12.5
HMVC - 28	5.497	12	8.268	1.496	7.087	5.551	0.276	0.197	10.7	13.4
HMVC - 30	5.888	12	8.661	1.535	7.480	5.945	0.276	0.197	11.6	14.5
HMVC - 32	6.284	8	9.252	1.575	8.110	6.339	0.276	0.236	13.3	17.0
HMVC - 34	6.659	8	9.645	1.614	8.465	6.732	0.276	0.236	14.7	18.5
HMVC - 36	7.066	8	10.039	1.615	8.858	7.126	0.276	0.236	16.0	20.0
HMVC - 38	7.472	8	10.630	1.653	9.409	7.520	0.315	0.276	17.8	23.1
HMVC - 40	7.847	8	11.024	1.693	9.882	7.913	0.315	0.276	19.4	25.1
HMVC - 44	8.628	8	12.008	1.732	10.748	8.740	0.315	0.354	22.3	29.5
HMVC - 48	9.442	6	12.992	1.811	11.654	9.528	0.354	0.394	25.6	35.9
HMVC - 52	10.192	6	13.976	1.850	12.559	10.315	0.354	0.433	29.1	41.8
HMVC - 56	11.004	6	14.961	1.929	13.425	11.102	0.354	0.472	32.7	48.4
HMVC - 60	11.785	6	15.945	2.008	14.331	11.890	0.394	0.551	36.6	56.3
HMVC - 64	12.562	6	16.929	2.087	15.236	12.677	0.394	0.551	40.8	65.1
HMVC - 68	13.334	5	17.717	2.087	16.063	13.465	0.394	0.551	44.0	71.5
HMVC - 72	14.170	5	18.701	2.205	16.969	14.252	0.394	0.590	48.5	81.4
HMVC - 76	14.957	5	19.685	2.283	17.795	15.039	0.433	0.630	52.1	90.2
HMVC - 80	15.745	5	20.669	2.362	18.701	15.827	0.433	0.669	56.9	101.2
HMVC - 84	16.532	5	21.457	2.401	19.606	16.614	0.433	0.669	62.0	110.9
HMVC - 88	17.319	5	22.244	2.441	20.433	17.402	0.472	0.669	65.9	121.0
HMVC - 92	18.107	5	23.228	2.520	21.299	18.189	0.472	0.669	69.8	134.2
HMVC - 96	18.894	5	24.094	2.559	22.165	18.976	0.472	0.748	75.2	143.0
HMVC - 100	19.682	5	25.000	2.598	23.031	19.764	0.472	0.748	80.6	157.3
HMVC - 106	20.867	4	26.378	2.716	24.291	20.945	0.512	0.827	87.1	176.0
HMVC - 112	21.923	4	27.756	2.795	25.591	22.126	0.512	0.866	94.9	198.0
HMVC - 120	23.623	4	29.528	2.874	27.283	23.701	0.512	0.905	104.5	220.0
HMVC - 126	24.804	4	30.709	2.913	28.583	24.882	0.551	0.905	113.0	242.0
HMVC - 134	26.379	4	32.480	2.992	30.236	26.457	0.551	0.945	123.2	270.6
HMVC - 142	27.961	3	34.252	3.071	31.969	28.031	0.590	0.984	135.9	301.4
HMVC - 150	29.536	3	36.024	3.110	33.661	29.606	0.590	0.984	150.4	330.0
HMVC - 160	31.504	3	38.189	3.150	35.748	31.575	0.630	0.984	161.2	380.6
HMVC - 170	33.473	3	40.157	3.268	37.874	33.543	0.630	1.024	177.6	418.0
HMVC - 180	35.441	3	42.126	3.386	39.960	35.511	0.669	1.181	192.2	462.0
HMVC - 190	37.410	3	44.291	3.386	42.087	37.480	0.669	1.181	210.2	523.6

HMVC - 10 through HMVC - 64 have American National Threads Class 3.

HMVC - 68 through HMVC - 190 have Acme General-Purpose Threads Class 3G.

INDEX

TIMKEN® SAF SPLIT-BLOCK HOUSED UNITS

222 Series (225, 222 Series SAF, SDAF) D-37
223 Series (226, 223 Series SAF, SDAF) D-39
230 Series (230K Series SAF, SDAF) D-40
231 Series (231, 231K Series SDAF) D-42
232 Series (232, 232K Series SDAF) D-43
Engineering D-3
Inch Accessories – Locknuts and Lockplates D-104
Inch Accessories – Locknuts and Lockwashers D-100
Inch Accessories – Pull-Type Sleeves D-86
Inch Accessories – Push-Type Sleeves D-96
Inch DUSTAC™ Shaft Seal D-80
Inch HMVC Hydraulic Nuts D-108
Inch Sine Bar Gages D-81
Inch Straight Bore Mounting SAF222 and SAF223 Series D-70
Inch Straight Bore Mounting SDAF222 and SDAF223 Series .. D-72
Inch Straight Bore Mounting SDAF231 and SDAF232 Series .. D-74
Inch Tapered Bore Mounting SAF225 and SAF226 Series D-50
Inch Tapered Bore Mounting SAF230K, SDAF230K Series D-64
Inch Tapered Bore Mounting SDAF225 and SDAF226 Series .. D-60
Inch Tapered Bore Mounting
SDAF231K and SDAF232K Series D-68
Inch TTU Take-Up Units D-78
Inch TU Take-Up Units D-77
SAF Housed Unit Introduction D-47
Timken® SAF Split-Block Housed Units D-1

10M 1-13: 29 Order No. 10591 | Timken® is a registered trademark of The Timken Company. | © 2013 The Timken Company | Printed in U.S.A.

TIMKEN

The Timken team applies their know-how to improve the reliability and performance of machinery in diverse markets worldwide. The company designs, makes and markets high-performance steel as well as mechanical components, including bearings, gears, chain and related mechanical power transmission products and services.

www.timken.com

Stronger. **Commitment.** Stronger. **Value.** Stronger. **Worldwide.** Stronger. **Together.** | Stronger. **By Design.**

Price: USD $75