The Timken Company
4500 Mt Pleasant St. NW
N. Canton, OH 44720
Phone: (234) 262-3000
E-Mail: CustomerCAD@timken.com • **Web site:** www.timken.com

Timken Part Number FSAF 22517, Inch Tapered Bore Mounting Pillow Block SAF225 and SAF226 Series

- The basic number for ordering complete pillow block assemblies is listed in the table below.
- Each assembly includes the housing cap and base, cap bolts, bearing, bearing adapter, locknut and lockwasher, stabilizing ring, and triple ring seals.
- If only the pillow block housing is desired, use the numbers listed in column headed "Housing Only". These units include: cap, base, cap bolts, triple ring seals and stabilizing ring.
- Assembly and pillow blocks as described on this page constitute a fixed

more

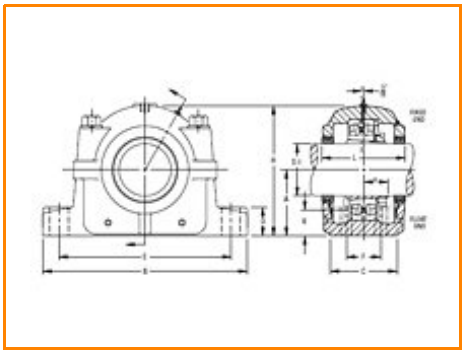

Specifications

Bearing Number	22217K
Diameter S-1	2 15/16 in
Adapter Assembly Number[1]	SNW-17 x 2-15/16
Housing Only[2]	FSAF 517
A	3.75 in
B	13.000 in
C	3.500 in
D	1.25 in

E	10.4375 in
E Max.	11.0000 in
E Min.	9.8750 in
F	2.125 in
Bolt Hole Length	1.1875 in
Bolt Hole Width	0.625 in
H	7.250 in
Triple Seal 2 Req'd	LER 53
Assembly Weight	40 lb

[1] Includes sleeve, locknut and lockwasher. Add shaft size to order.

[2] "Housing Only" includes: cap, base, cap bolts, triple ring seals and stabilizing ring as required. When ordering non-standard housing only specify the shaft size.

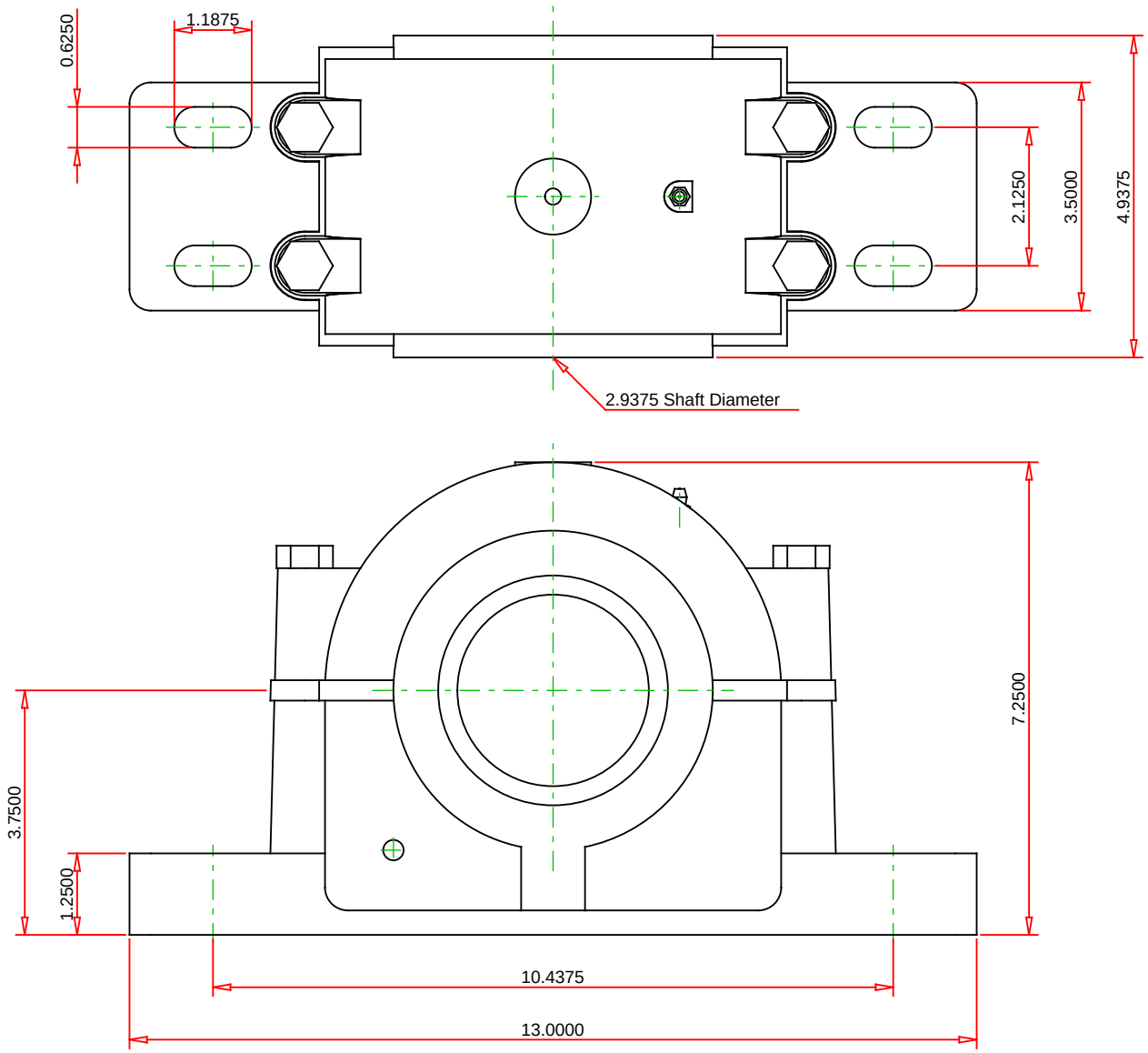

IMPERIAL UNITS

Housing	FSAF 517
Bearing	22217K
Seal Type	LER 53
Adapter Sleeve	SNW-17 x 2-15/16
(includes 1 sleeve, 1 locknut and 1 lockwasher)	
Stabilizing Ring	SR-17-14
Bolt Hole Spacing Max.	11.0000
Bolt Hole Spacing Min.	9.8750

TIMKEN®

THE TIMKEN COMPANY
NORTH CANTON, OHIO USA

FSAF 22517
PILLOW BLOCK SAF225 AND SAF226

Every reasonable effort has been made to ensure the accuracy of the information contained in this writing, but no liability is accepted for errors, omissions or for any other reason.

FOR DISCUSSION ONLY