The Timken Company
4500 Mt Pleasant St. NW
N. Canton, OH 44720
Phone: (234) 262-3000
E-Mail: CustomerCAD@timken.com • **Web site:** www.timken.com

Timken Part Number 29352EJ, Thrust Spherical Roller Bearings

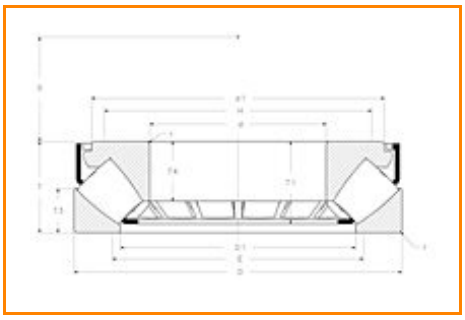

Specifications | Dimensions | Basic Load Ratings

Specifications

UPC Code	87796221987
Weight	46.9 Kg 103.4 lb

Dimensions

d - Bore	260.00 mm 10.236 in
D - Outside Diameter	420.000 mm 16.535 in
d1 - Cone Outside Diameter	382.20 mm 15.047 in
D1 - Cup Bore	324.00 mm 12.756 in
E - Shoulder Diameter - Housing (Max)	340.00 mm 13.386 in

H - Shoulder Diameter - Shaft (Min)	356.00 mm 14.016 in
r - Fillet Radius	4.00 mm 0.160 in
S - Dimension	148.00 mm 5.827 in
T - Total Width	95.00 mm 3.740 in
T1 - Cage Position	84.70 mm 3.335 in
T3 - Cup Width	46.00 mm 1.811 in
T4 - Cone Width	61.00 mm 2.402 in

Basic Load Ratings

Static Load Rating	8100 kN 1820000 lbf
Dynamic Load Rating	2580 kN 579000 lbf
Thermal Speed Rating	790 rpm

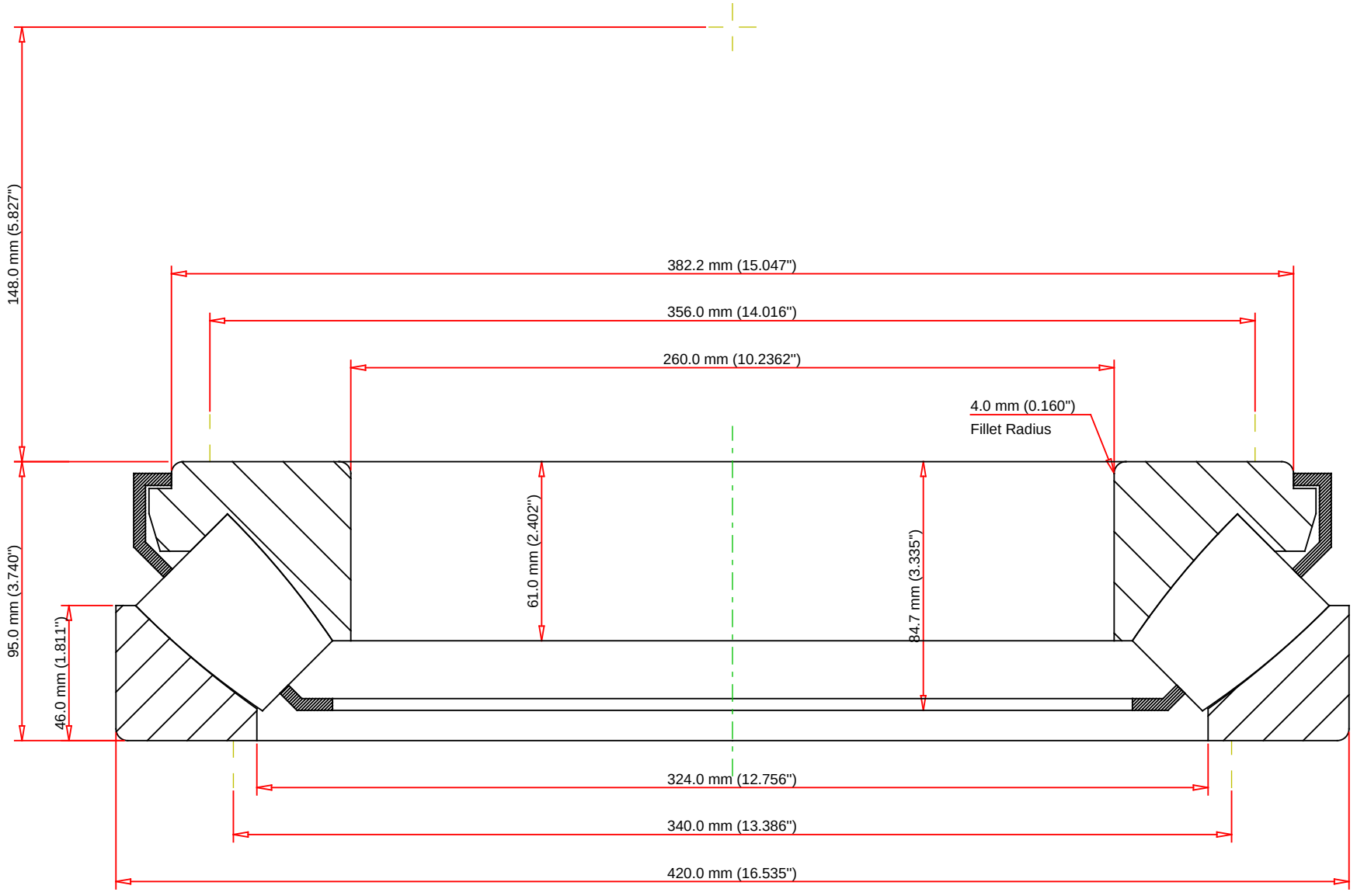

METRIC UNITS

Static Load Rating - C_{oa}	1820000	lbf	8100	kN	TIMKEN
Dynamic Load Rating - C_a	579000	lbf	2580	kN	
Weight	103.4	lb	46.9	kg	
					THE TIMKEN COMPANY NORTH CANTON, OHIO USA

29352EJ

Thrust Spherical Roller Bearings

Every reasonable effort has been made to ensure the accuracy of the information contained in this writing, but no liability is accepted for errors, omissions or for any other reason.

FOR DISCUSSION ONLY