The Timken Company
4500 Mt Pleasant St. NW
N. Canton, OH 44720
Phone: (234) 262-3000
E-Mail: CustomerCAD@timken.com • **Web site:** www.timken.com

Timken Part Number 387AS - 382A, Tapered Roller Bearings - TS (Tapered Single) Imperial

This is the most basic and most widely used type of tapered roller bearing. It consists of two main separable parts: the cone (inner ring) assembly and the cup (outer ring). It is typically mounted in opposing pairs on a shaft.



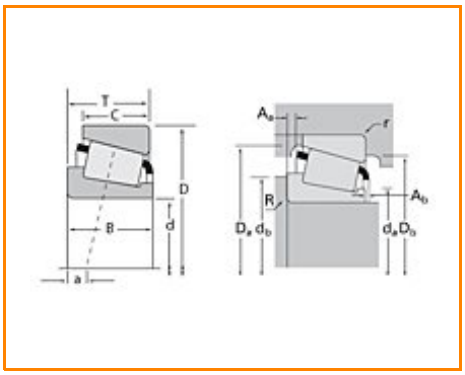

Specifications | Dimensions | Abutment and Fillet Dimensions | Basic Load Ratings | Factors

Specifications

Series	385
Cone Part Number	387AS
Cup Part Number	382A
Design Units	Imperial
Bearing Weight	0.600 Kg 1.30 lb
Cage Type	Stamped Steel

Dimensions

d - Bore	57.150 mm 2.2500 in

D - Cup Outer Diameter	96.838 mm 3.8125 in
B - Cone Width	21.946 mm 0.8640 in
C - Cup Width	15.875 mm 0.6250 in
T - Bearing Width	21.001 mm 0.8268 in

Abutment and Fillet Dimensions

R - Cone Backface "To Clear" Radius[1]	5.080 mm 0.2 in
r - Cup Backface "To Clear" Radius[2]	0.76 mm 0.030 in
da - Cone Frontface Backing Diameter	62.99 mm 2.48 in
db - Cone Backface Backing Diameter	72.90 mm 2.87 in
Da - Cup Frontface Backing Diameter	92.96 mm 3.66 in
Db - Cup Backface Backing Diameter	88.90 mm 3.50 in
Ab - Cage-Cone Frontface Clearance	2.8 mm 0.11 in
Aa - Cage-Cone Backface Clearance	0.8 mm 0.03 in
a - Effective Center Location[3]	-3 mm -0.12 in

Basic Load Ratings

C90 - Dynamic Radial Rating (90 million revolutions)[4]	28000 N 6280 lbf
C1 - Dynamic Radial Rating (1 million revolutions)[5]	108000 N 24200 lbf
C0 - Static Radial Rating	107000 N 24100 lbf
C_{a90} - Dynamic Thrust Rating (90 million revolutions)[6]	16900 N 3810 lbf

Factors

K - Factor[7]	1.65
e - ISO Factor[8]	0.35
Y - ISO Factor[9]	1.69
G1 - Heat Generation Factor (Roller-Raceway)	42
G2 - Heat Generation Factor (Rib-Roller End)	15.7
Cg - Geometry Factor	0.0859

[1] These maximum fillet radii will be cleared by the bearing corners.
[2] These maximum fillet radii will be cleared by the bearing corners.
[3] Negative value indicates effective center inside cone backface.
[4] Based on 90 x 10^6 revolutions L_{10} life, for The Timken Company life calculation method. C_{90} and C_{a90} are radial and thrust values.
[5] Based on 1 x 10^6 revolutions L_{10} life, for the ISO life calculation method.
[6] Based on 90 x 10^6 revolutions L_{10} life, for The Timken Company life calculation method. C_{90} and C_{a90} are radial and thrust values for a single-row, $C_{90(2)}$ is the two-row radial value.
[7] These factors apply for both inch and metric calculations. Consult your Timken representative for instruction on use.
[8] These factors apply for both inch and metric calculations. Consult your Timken representative for instruction on use.
[9] These factors apply for both inch and metric calculations. Consult your Timken representative for instruction on use.

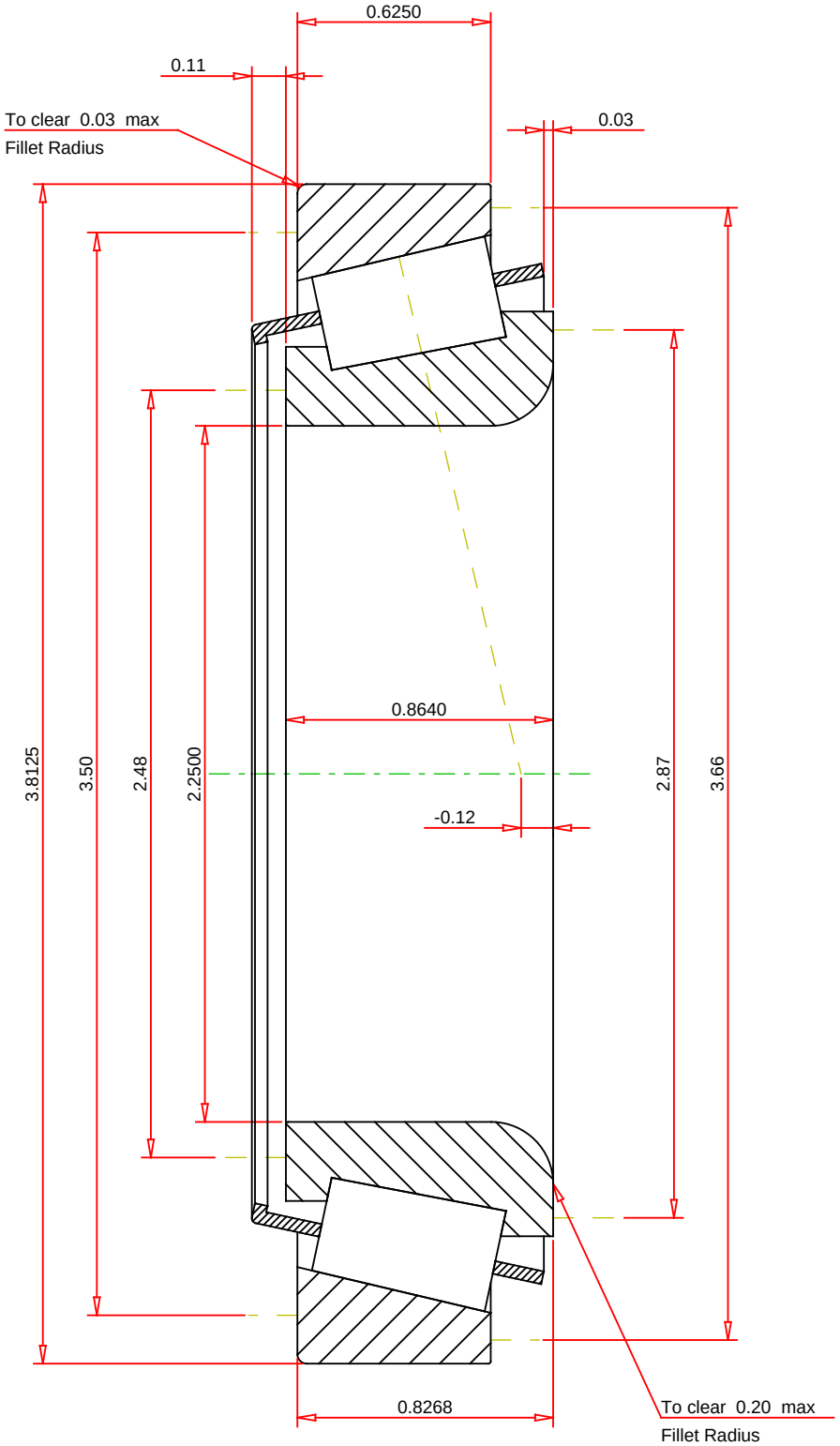

IMPERIAL UNITS

ISO Factor - e	0.35	
ISO Factor - Y	1.69	
Bearing Weight	1.3	lb
Number of Rollers Per Row	19	
Effective Center Location	-0.12	inch

TIMKEN®

THE TIMKEN COMPANY
NORTH CANTON, OHIO USA

387AS - 382A
TS BEARING ASSEMBLY

K Factor	1.65	
Dynamic Radial Rating - C90	28000	lbf
Dynamic Thrust Rating - Ca90	16900	lbf
Static Radial Rating - C0	107000	lbf
Dynamic Radial Rating - C1	108000	lbf

Every reasonable effort has been made to ensure the accuracy of the information contained in this writing, but no liability is accepted for errors, omissions or for any other reason.

FOR DISCUSSION ONLY