The Timken Company
4500 Mt Pleasant St. NW
N. Canton, OH 44720
Phone: (234) 262-3000
E-Mail: CustomerCAD@timken.com • **Web site:** www.timken.com

Timken Part Number 94650 - 94113, Tapered Roller Bearings - TS (Tapered Single) Imperial

This is the most basic and most widely used type of tapered roller bearing. It consists of two main separable parts: the cone (inner ring) assembly and the cup (outer ring). It is typically mounted in opposing pairs on a shaft.



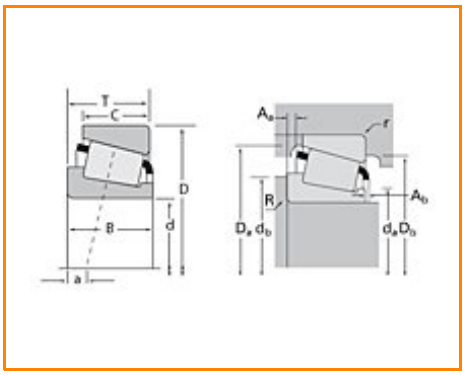

Specifications | Dimensions | Abutment and Fillet Dimensions | Basic Load Ratings | Factors

Specifications

Series	94000
Cone Part Number	94650
Cup Part Number	94113
Design Units	Imperial
Bearing Weight	17.1 Kg 37.7 lb
Cage Type	Stamped Steel

Dimensions

d - Bore	165.1 mm 6.5 in

D - Cup Outer Diameter	288.925 mm 11.3750 in
B - Cone Width	63.5 mm 2.5 in
C - Cup Width	47.625 mm 1.8750 in
T - Bearing Width	63.5 mm 2.5 in

Abutment and Fillet Dimensions

R - Cone Backface "To Clear" Radius[1]	7.110 mm 0.280 in
r - Cup Backface "To Clear" Radius[2]	3.30 mm 0.130 in
da - Cone Frontface Backing Diameter	188.98 mm 8.49 in
db - Cone Backface Backing Diameter	197.10 mm 7.76 in
Da - Cup Frontface Backing Diameter	273.05 mm 10.75 in
Db - Cup Backface Backing Diameter	259.08 mm 10.20 in
Ab - Cage-Cone Frontface Clearance	6.3 mm 0.25 in
Aa - Cage-Cone Backface Clearance	6.1 mm 0.24 in
a - Effective Center Location[3]	-0.8 mm -0.03 in

Basic Load Ratings

C90 - Dynamic Radial Rating (90 million revolutions)[4]	171000 N 38500 lbf
C1 - Dynamic Radial Rating (1 million revolutions)[5]	660000 N 148000 lbf
C0 - Static Radial Rating	1070000 N 242000 lbf
C_{a90} - Dynamic Thrust Rating (90 million revolutions)[6]	137000 N 30800 lbf

Factors

K - Factor[7]	1.25
e - ISO Factor[8]	0.47
Y - ISO Factor[9]	1.28
G1 - Heat Generation Factor (Roller-Raceway)	692.3
G2 - Heat Generation Factor (Rib-Roller End)	93.9
Cg - Geometry Factor	0.129

[1] These maximum fillet radii will be cleared by the bearing corners.
[2] These maximum fillet radii will be cleared by the bearing corners.
[3] Negative value indicates effective center inside cone backface.
[4] Based on 90 x 10^6 revolutions L_{10} life, for The Timken Company life calculation method. C_{90} and C_{a90} are radial and thrust values.
[5] Based on 1 x 10^6 revolutions L_{10} life, for the ISO life calculation method.
[6] Based on 90 x 10^6 revolutions L_{10} life, for The Timken Company life calculation method. C_{90} and C_{a90} are radial and thrust values for a single-row, $C_{90(2)}$ is the two-row radial value.
[7] These factors apply for both inch and metric calculations. Consult your Timken representative for instruction on use.
[8] These factors apply for both inch and metric calculations. Consult your Timken representative for instruction on use.
[9] These factors apply for both inch and metric calculations. Consult your Timken representative for instruction on use.

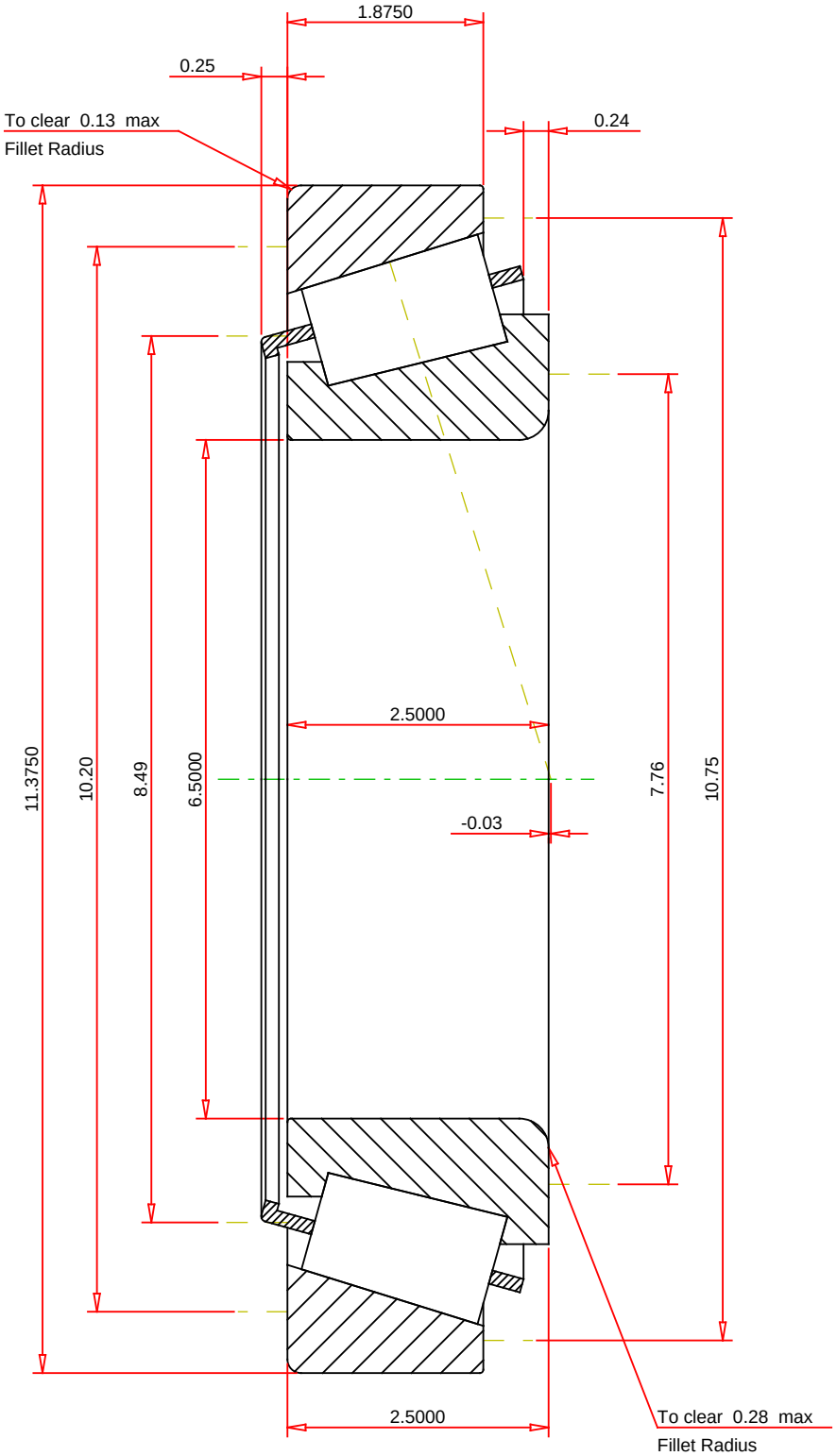

IMPERIAL UNITS

ISO Factor - e	0.47	
ISO Factor - Y	1.28	
Bearing Weight	37.7	lb
Number of Rollers Per Row	24	
Effective Center Location	-0.03	inch

TIMKEN

THE TIMKEN COMPANY
NORTH CANTON, OHIO USA

94650 - 94113
TS BEARING ASSEMBLY

K Factor	1.25	
Dynamic Radial Rating - C90	171000	lbf
Dynamic Thrust Rating - Ca90	137000	lbf
Static Radial Rating - C0	1070000	lbf
Dynamic Radial Rating - C1	660000	lbf

Every reasonable effort has been made to ensure the accuracy of the information contained in this writing, but no liability is accepted for errors, omissions or for any other reason.

FOR DISCUSSION ONLY