The Timken Company
4500 Mt Pleasant St. NW
N. Canton, OH 44720
Phone: (234) 262-3000
E-Mail: CustomerCAD@timken.com • **Web site:** www.timken.com

Part Number YCJ 55 SGT, Fafnir® Four-Bolt Flanged Units Setscrew Locking



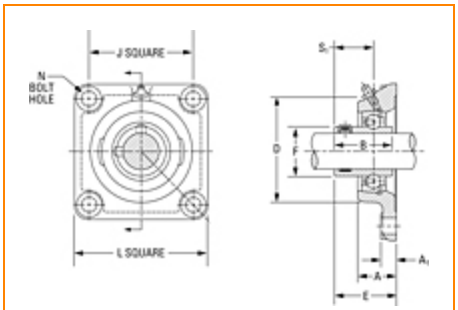

Specifications | Dimensions | Basic Load Ratings

Specifications

Shaft Size d	2.165 in 55 mm
Bearing Number	GYE55KRRB SGT
Dimension D	4.752 in 120.7 mm
Dimension E	2.547 in 64.7 mm
Inside Ring Outside Diameter	2.747 in 69.77 mm
Series	Industrial
Weight	8.48 lb 3.85 Kg
Seal Type	Shroud Seal

Housing Construction	Four-Bolt Square Flange
Alternate Part Name	YCJ55 SGT

Dimensions

Total Length L	161.9 mm 6.374 in
Housing Width A	1.843 in 46.8 mm
Bolt Hole Size N	16 mm 0.630 in
Flange Thickness A1	16.7 mm 0.657 in
Center of Bearing from Housing End A2	31.4 mm 1.236 in
Inside Ring Width B	N/A
Total Height	161.9 mm 6.374 in
Bolt Size	M16
Center of Bearing from Bearing End S	22.3 mm 0.878 in

Basic Load Ratings

Static Load Rating	6570 lbf 29200 N
Dynamic Load Rating	10800 lbf 48100 N

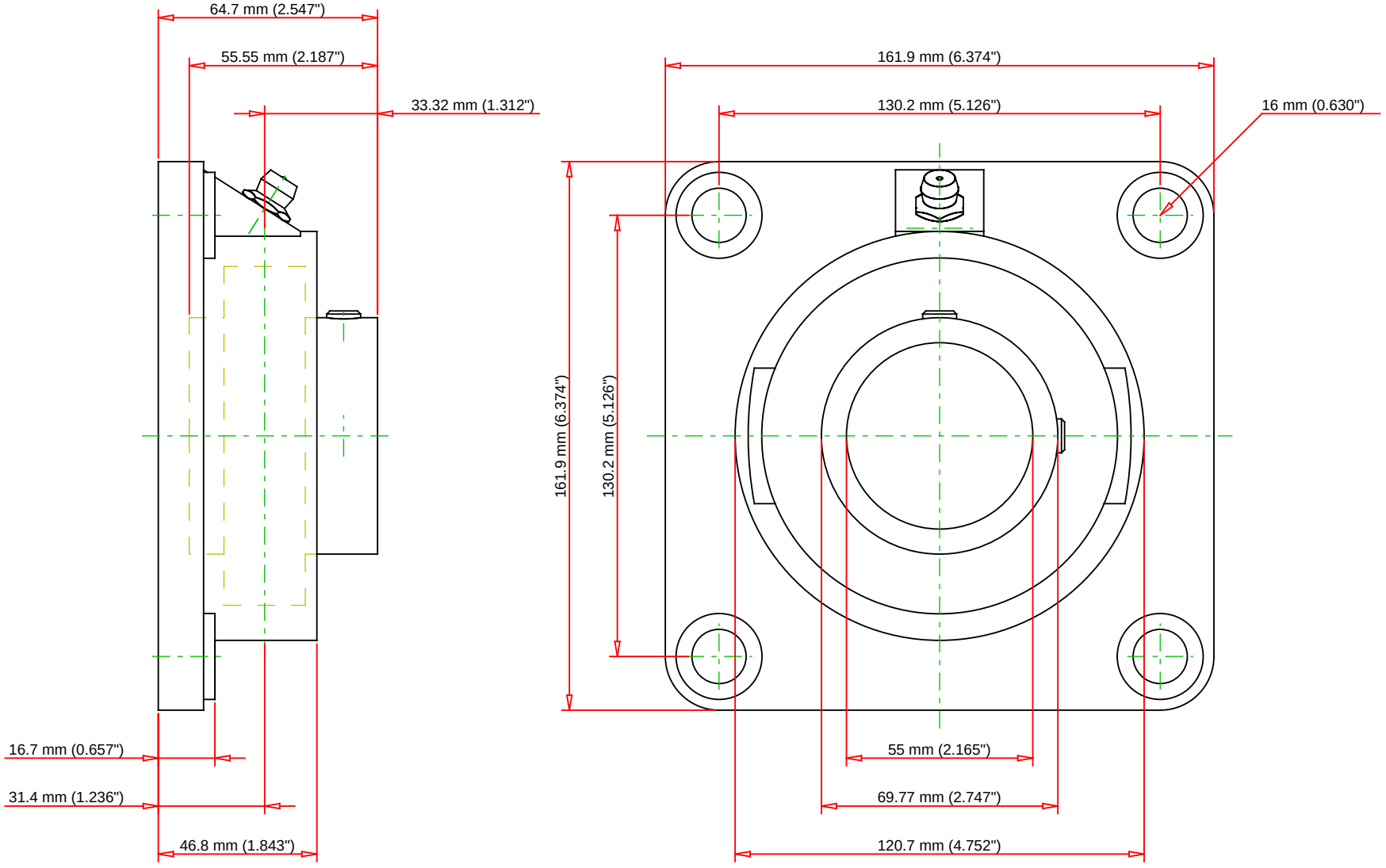

Bearing Number	GYE55KRRB SGT			
Load Ratings - C_r	10800	lbf	48000	N
Load Ratings - C_{0r}	6400	lbf	28500	N
Weight	0	lb	0	kg
Bolt Size	M10x1.5			

TIMKEN

THE TIMKEN COMPANY
NORTH CANTON, OHIO USA

YCJ 55 SGT

Fafnir® Four-Bolt Flanged Units Setscrew Locking

Every reasonable effort has been made to ensure the accuracy of the information contained in this writing, but no liability is accepted for errors, omissions or for any other reason.

FOR DISCUSSION ONLY