The Timken Company
4500 Mt Pleasant St. NW
N. Canton, OH 44720
Phone: (234) 262-3000
E-Mail: CustomerCAD@timken.com • **Web site:** www.timken.com

Timken Part Number N 09-W 09, Inch Accessories - Locknut and Lockwasher

- The chart below shows dimensions for locknuts and lockwashers used in the mounting of straight bore bearings on shafts.
- Other dimensions and tolerances related to shaft configurations are also shown.
- Dimensions are presented according to bearing bore size and are applicable to bearings in the various series (e.g., 222 and 223 etc.).

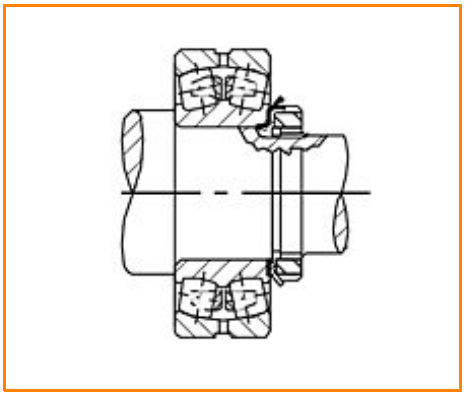

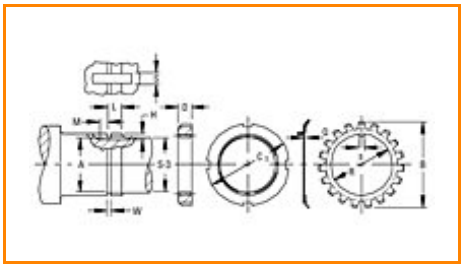

Specifications | Threads | Shaft | Locknut | Lockwasher

Specifications

Bearing Bore	45 mm
Threads No. per Inch	18
Locknut	N 09
Lockwasher	W 09

Threads

Max. Major Diameter	44.88 mm 1.767 in

Min. Major Diameter	44.67 mm 1.7588 in
Max. Pitch Diameter	43.96 mm 1.7309 in
Min. Pitch Diameter	43.85 mm 1.7264 in
Minor Diameter	43.15 mm 1.6988 in

Shaft

Relief Diameter A	42.75 mm 1.6832 in
Diameter S-3	42.86 mm 1 11/16 in
W[1]	3.2 mm 1/8 in
L[2]	13.50 mm 0.5313 in
H[3]	2.4 mm 3/32 in
S[4]	7.4 mm 7.9 mm 0.290 in 5/16 in
M[5]	4.00 mm 5/32 in

Locknut

C_1	64.30 mm 2 17/32 in

D	11.40 mm 0.4480 in

Lockwasher

Q	1.50 mm 0.058 in
R	46.2 mm 1.817 in
B	69.50 mm 2 47/64 in

[1] Tolerance -0 to + 0.4 mm (-0 to +1/64 in)
[2] Tolerance -0 to + 0.4 mm (-0 to +1/64 in)
[3] Tolerance -0 to + 0.4 mm (-0 to +1/64 in)
[4] Tolerance -0 to + 0.4 mm (-0 to +1/64 in)
[5] Tolerance -0 to + 0.4 mm (-0 to +1/64 in)