The Timken Company
4500 Mt Pleasant St. NW
N. Canton, OH 44720
Phone: (234) 262-3000
E-Mail: CustomerCAD@timken.com • **Web site:** www.timken.com

Timken Part Number 495AA - 492A, Tapered Roller Bearings - TS (Tapered Single) Imperial

This is the most basic and most widely used type of tapered roller bearing. It consists of two main separable parts: the cone (inner ring) assembly and the cup (outer ring). It is typically mounted in opposing pairs on a shaft.



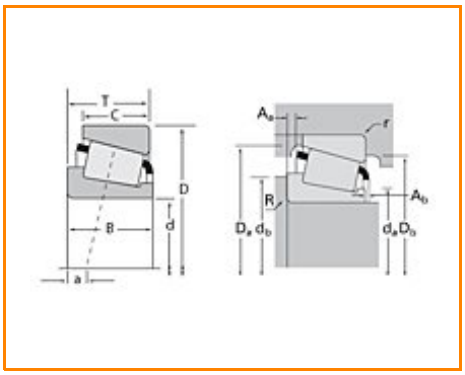

Specifications | Dimensions | Abutment and Fillet Dimensions | Basic Load Ratings | Factors

Specifications

Series	495
Cone Part Number	495AA
Cup Part Number	492A
Design Units	Imperial
Bearing Weight	1.900 Kg 4.30 lb
Cage Type	Stamped Steel

Dimensions

d - Bore	66.675 mm 2.6250 in

D - Cup Outer Diameter	133.350 mm 5.2500 in
B - Cone Width	29.769 mm 1.1720 in
C - Cup Width	22.225 mm 0.8750 in
T - Bearing Width	30.165 mm 1.1876 in

Abutment and Fillet Dimensions

R - Cone Backface "To Clear" Radius[1]	3.560 mm 0.14 in
r - Cup Backface "To Clear" Radius[2]	3.30 mm 0.130 in
da - Cone Frontface Backing Diameter	77.98 mm 3.74 in
db - Cone Backface Backing Diameter	85.09 mm 3.35 in
Da - Cup Frontface Backing Diameter	129.00 mm 5.08 in
Db - Cup Backface Backing Diameter	119.89 mm 4.72 in
Ab - Cage-Cone Frontface Clearance	3 mm 0.12 in
Aa - Cage-Cone Backface Clearance	1.8 mm 0.07 in
a - Effective Center Location[3]	-0.8 mm -0.03 in

Basic Load Ratings

C90 - Dynamic Radial Rating (90 million revolutions)[4]	40000 N 9000 lbf
C1 - Dynamic Radial Rating (1 million revolutions)[5]	154000 N 34700 lbf
C0 - Static Radial Rating	216000 N 48600 lbf
C_{a90} - Dynamic Thrust Rating (90 million revolutions)[6]	30500 N 6850 lbf

Factors

K - Factor[7]	1.31
e - ISO Factor[8]	0.44
Y - ISO Factor[9]	1.35
G1 - Heat Generation Factor (Roller-Raceway)	104.6
G2 - Heat Generation Factor (Rib-Roller End)	29.3
Cg - Geometry Factor	0.125

[1] These maximum fillet radii will be cleared by the bearing corners.
[2] These maximum fillet radii will be cleared by the bearing corners.
[3] Negative value indicates effective center inside cone backface.
[4] Based on 90 x 10^6 revolutions L_{10} life, for The Timken Company life calculation method. C_{90} and C_{a90} are radial and thrust values.
[5] Based on 1 x 10^6 revolutions L_{10} life, for the ISO life calculation method.
[6] Based on 90 x 10^6 revolutions L_{10} life, for The Timken Company life calculation method. C_{90} and C_{a90} are radial and thrust values for a single-row, $C_{90(2)}$ is the two-row radial value.
[7] These factors apply for both inch and metric calculations. Consult your Timken representative for instruction on use.
[8] These factors apply for both inch and metric calculations. Consult your Timken representative for instruction on use.
[9] These factors apply for both inch and metric calculations. Consult your Timken representative for instruction on use.

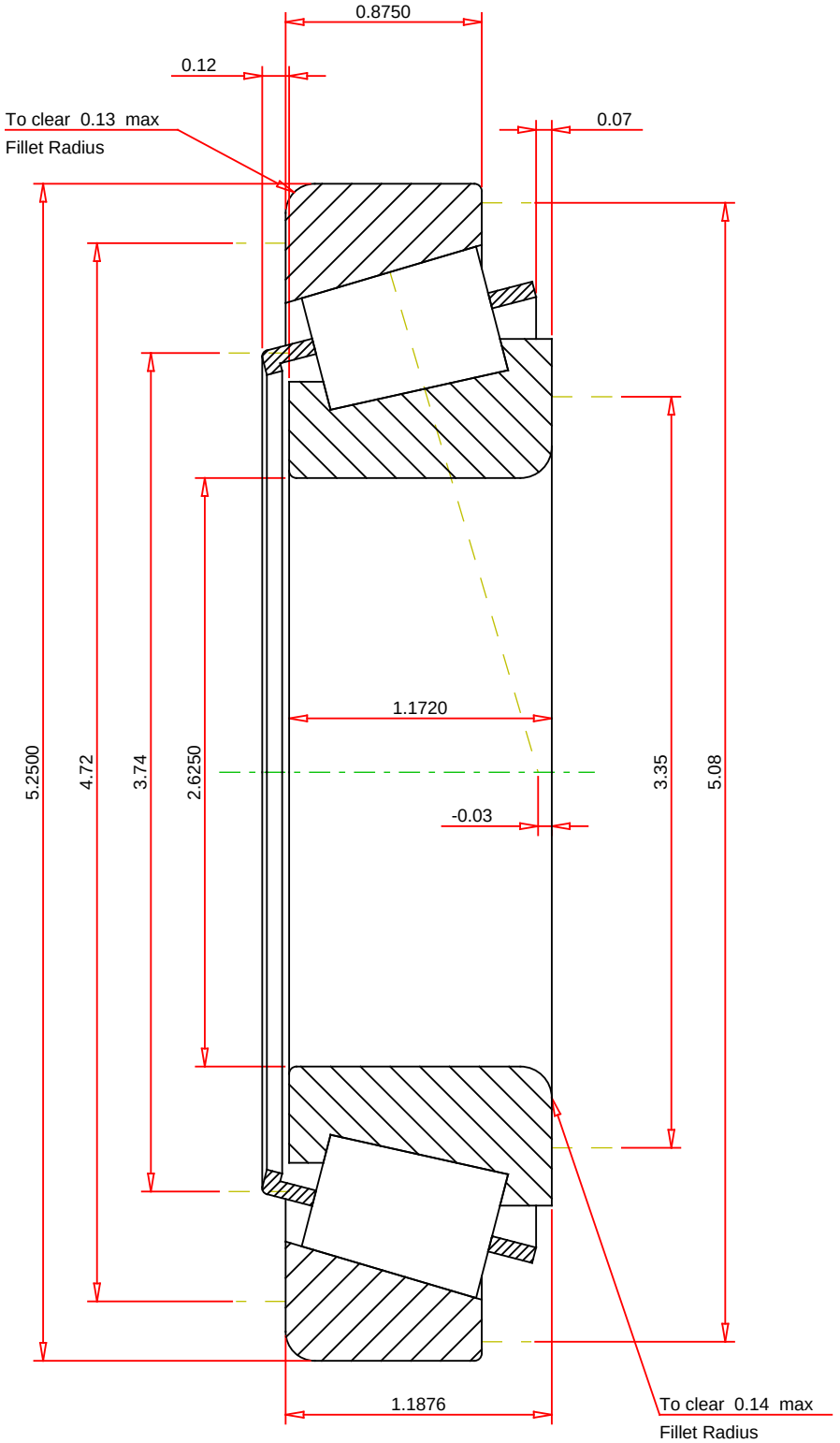

IMPERIAL UNITS

ISO Factor - e	0.44	
ISO Factor - Y	1.35	
Bearing Weight	4.3	lb
Number of Rollers Per Row	23	
Effective Center Location	-0.03	inch

TIMKEN®

THE TIMKEN COMPANY
NORTH CANTON, OHIO USA

495AA - 492A
TS BEARING ASSEMBLY

K Factor	1.31	
Dynamic Radial Rating - C90	40000	lbf
Dynamic Thrust Rating - Ca90	30500	lbf
Static Radial Rating - C0	216000	lbf
Dynamic Radial Rating - C1	154000	lbf

Every reasonable effort has been made to ensure the accuracy of the information contained in this writing, but no liability is accepted for errors, omissions or for any other reason.

FOR DISCUSSION ONLY