The Timken Company
4500 Mt Pleasant St. NW
N. Canton, OH 44720
Phone: (234) 262-3000
E-Mail: CustomerCAD@timken.com • **Web site:** www.timken.com

Part Number GYE70KRRB, Fafnir® Wide Inner Ring Setscrew Locking Ball Bearings



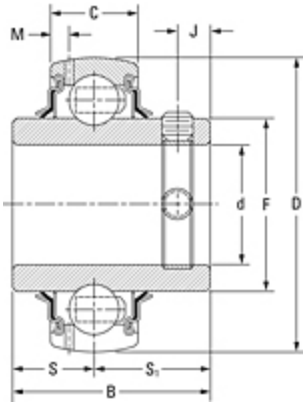

Specifications | Dimensions | Basic Load Ratings

Specifications

Shaft Size d	2.756 in 70 mm
Bore Type	Cylindrical bore
Bearing Type	Ball Bearing
Material	Bearing Steel
Lubrication Type	Relubricatable
O.D. Type	Spherical OD
Dimension M	0.200 in 5.08 mm
Series	Industrial
Weight	0.50 lb 0.2 Kg

Sub Series	GYE..KRRB
Seal Type	Shroud Seal

Dimensions

Outside Diameter D	4.921 in 125.000 mm
Inner Ring Width B	69.85 mm 2.750 in
Outside Ring Width C	28.000 mm 1.102 in
Radius r	0.6 mm 0.024 in
Center of Bearing from End S	26.97 mm 1.062 in
Dimension S1	42.84 mm 1.687 in
Set Screw Distance S2	12.00 mm 0.472 in
Set Screw Size	M12x1.75
Number of Set Screws	2
Angle between Set Screws	90 °

Basic Load Ratings

Static Load Rating	9890 lbf 44000 N
Dynamic Load Rating	15500 lbf 69000 N

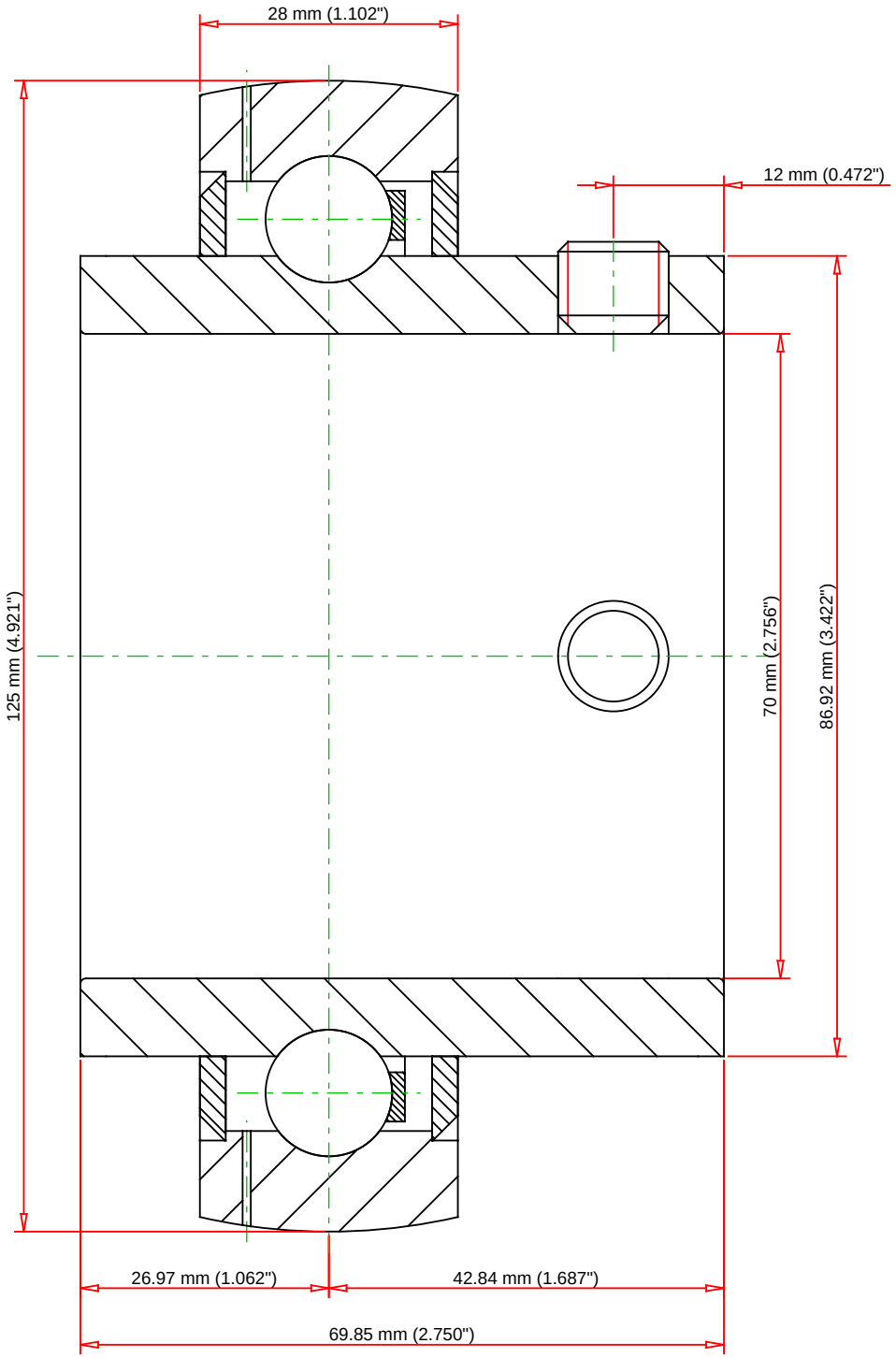

Weight	0.5 lb	0.2 kg

TIMKEN®

THE TIMKEN COMPANY
NORTH CANTON, OHIO USA

GYE70KRRB

Fafnir® Wide Inner Ring Setscrew Locking Ball Bearings

Basic Load Ratings - C_r	15600 lbf	69500 N
Load Ratings - C_{0r}	8500 lbf	37500 N

Every reasonable effort has been made to ensure the accuracy of the information contained in this writing, but no liability is accepted for errors, omissions or for any other reason.

FOR DISCUSSION ONLY