The Timken Company
4500 Mt Pleasant St. NW
N. Canton, OH 44720
Phone: (234) 262-3000
E-Mail: CustomerCAD@timken.com • **Web site:** www.timken.com

Timken Part Number 14139 - 14274, Tapered Roller Bearings - TS (Tapered Single) Imperial

This is the most basic and most widely used type of tapered roller bearing. It consists of two main separable parts: the cone (inner ring) assembly and the cup (outer ring). It is typically mounted in opposing pairs on a shaft.

RELATED PRODUCTS

RELATED PRODUCTS



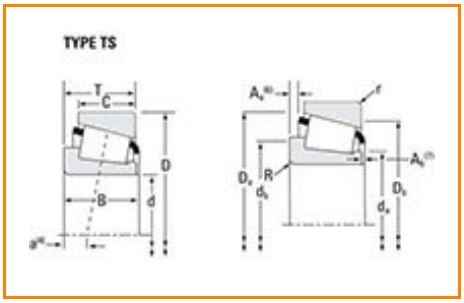

Specifications | Dimensions | Abutment and Fillet Dimensions | Basic Load Ratings | Factors

Specifications

Series	14000
Cone Part Number	14139
Cup Part Number	14274
Design Units	Imperial
Bearing Weight	0.70 lb
Cage Type	Stamped Steel

Dimensions

d - Bore	1.3770 in
D - Cup Outer Diameter	2.7170 in
B - Cone Width	0.7710 in
C - Cup Width	0.6250 in
T - Bearing Width	0.7813 in

Abutment and Fillet Dimensions

R - Cone Backface "To Clear" Radius[1]	0.050 in
r - Cup Backface "To Clear" Radius[2]	0.130 in
da - Cone Frontface Backing Diameter	1.61 in
db - Cone Backface Backing Diameter	1.67 in
Da - Cup Frontface Backing Diameter	2.52 in
Db - Cup Backface Backing Diameter	2.32 in
Ab - Cage-Cone Frontface Clearance	0.07 in
Aa - Cage-Cone Backface Clearance	0.02 in
a - Effective Center Location[3]	-0.17 in

Basic Load Ratings

C90 - Dynamic Radial Rating (90 million revolutions)[4]	14200 N 3180 lbf
C1 - Dynamic Radial Rating (1 million revolutions)[5]	54600 N 12300 lbf
C0 - Static Radial Rating	61700 N 13900 lbf
C_{a90} - Dynamic Thrust Rating (90 million revolutions)[6]	9260 N 2080 lbf

Factors

K - Factor[7]	1.53
e - ISO Factor[8]	0.38
Y - ISO Factor[9]	1.57
G1 - Heat Generation Factor (Roller-Raceway)	18
G2 - Heat Generation Factor (Rib-Roller End)	9.4
Cg - Geometry Factor	0.0668

[1] These maximum fillet radii will be cleared by the bearing corners.
[2] These maximum fillet radii will be cleared by the bearing corners.
[3] Negative value indicates effective center inside cone backface.
[4] Based on 90 x 10^6 revolutions L_{10} life, for The Timken Company life calculation method. C_{90} and C_{a90} are radial and thrust values.
[5] Based on 1 x 10^6 revolutions L_{10} life, for the ISO life calculation method.
[6] Based on 90 x 10^6 revolutions L_{10} life, for The Timken Company life calculation method. C_{90} and C_{a90} are radial and thrust values for a single-row, $C_{90(2)}$ is the two-row radial value.
[7] These factors apply for both inch and metric calculations. Consult your Timken representative for instruction on use.
[8] These factors apply for both inch and metric calculations. Consult your Timken representative for instruction on use.
[9] These factors apply for both inch and metric calculations. Consult your Timken representative for instruction on use.

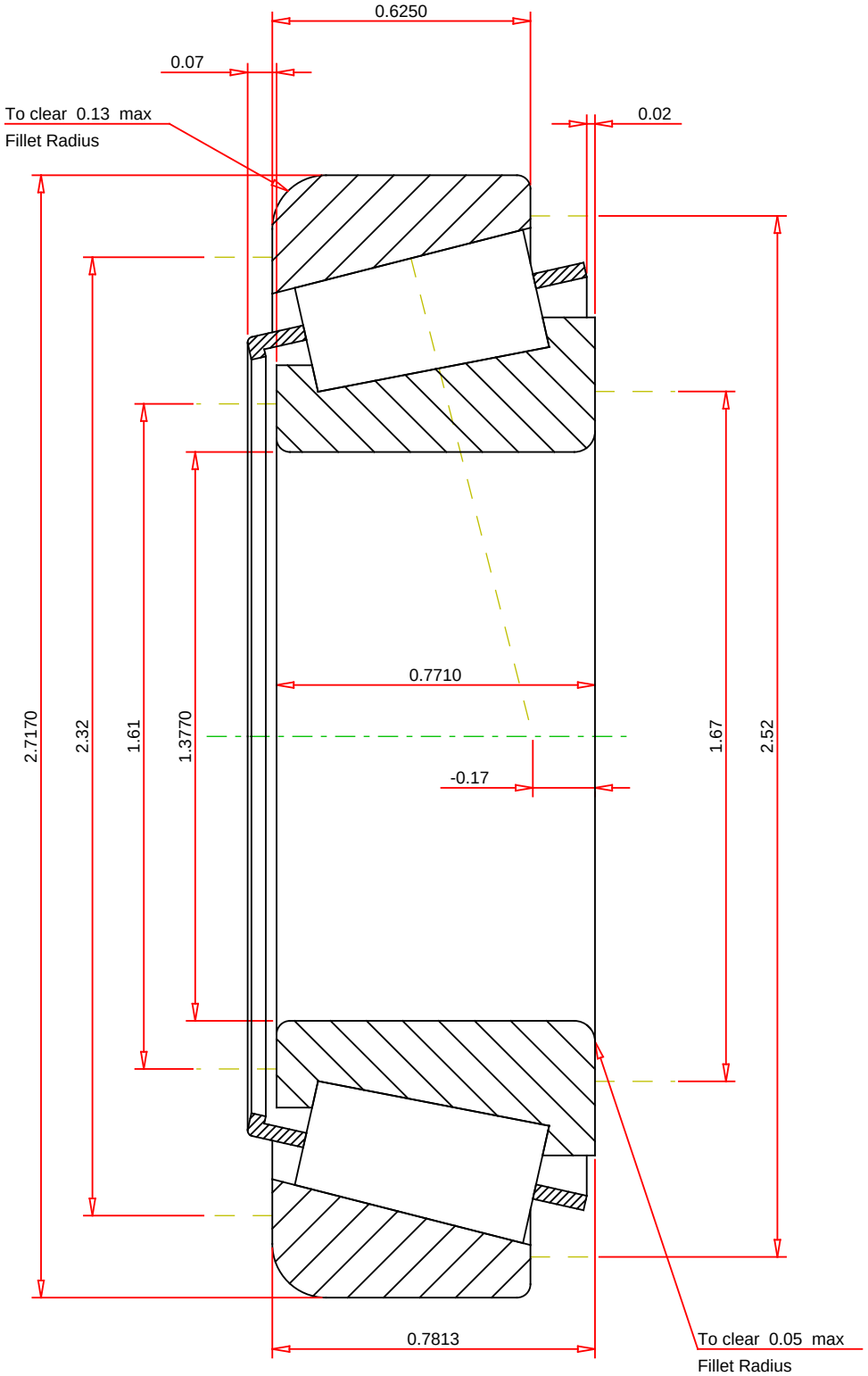

IMPERIAL UNITS

ISO Factor - e	0.38	
ISO Factor - Y	1.57	
Bearing Weight	0.7	lb
Number of Rollers Per Row	17	
Effective Center Location	-0.17	inch

TIMKEN

THE TIMKEN COMPANY
NORTH CANTON, OHIO USA

14139 - 14274
TS BEARING ASSEMBLY

K Factor	1.53	
Dynamic Radial Rating - C90	14200	lbf
Dynamic Thrust Rating - Ca90	9260	lbf
Static Radial Rating - C0	61700	lbf
Dynamic Radial Rating - C1	54600	lbf

Every reasonable effort has been made to ensure the accuracy of the information contained in this writing, but no liability is accepted for errors, omissions or for any other reason.

FOR DISCUSSION ONLY