The Timken Company
4500 Mt Pleasant St. NW
N. Canton, OH 44720
Phone: (234) 262-3000
E-Mail: CustomerCAD@timken.com • **Web site:** www.timken.com

Timken Part Number AN 20-W 20, Inch Accessories - Locknut and Lockwasher

- The chart below shows dimensions for locknuts and lockwashers used in the mounting of straight bore bearings on shafts.
- Other dimensions and tolerances related to shaft configurations are also shown.
- Dimensions are presented according to bearing bore size and are applicable to bearings in the various series (e.g., 222 and 223 etc.).

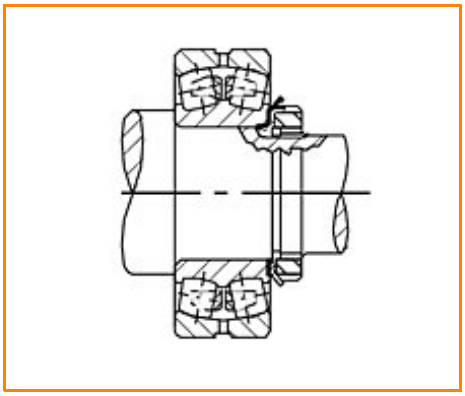

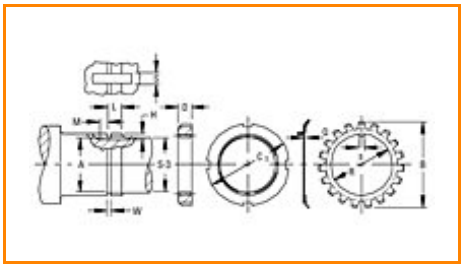

Specifications | Threads | Shaft | Locknut | Lockwasher

Specifications

Bearing Bore	100 mm
Threads No. per Inch	12
Locknut	AN 20
Lockwasher	W 20

Threads

Max. Major Diameter	99.52 mm 3.918 in

Min. Major Diameter	99.23 mm 3.9068 in
Max. Pitch Diameter	98.14 mm 3.8639 in
Min. Pitch Diameter	97.96 mm 3.8565 in
Minor Diameter	96.92 mm 3.8158 in

Shaft

Relief Diameter A	96.13 mm 3.7845 in
Diameter S-3	96.84 mm 3 13/16 in
W[1]	4.0 mm 5/32 in
L[2]	22.20 mm 0.8750 in
H[3]	4.0 mm 5/32 in
S[4]	9.0 mm 9.5 mm 0.353 in 3/8 in
M[5]	7.90 mm 5/16 in

Locknut

C_1	131.80 mm 5 3/16 in

D	19.30 mm 0.7600 in

Lockwasher

Q	2.40 mm 0.094 in
R	102.1 mm 4.018 in
B	139.70 mm 5 1/2 in

[1] Tolerance -0 to + 0.4 mm (-0 to +1/64 in)
[2] Tolerance -0 to + 0.4 mm (-0 to +1/64 in)
[3] Tolerance -0 to + 0.4 mm (-0 to +1/64 in)
[4] Tolerance -0 to + 0.4 mm (-0 to +1/64 in)
[5] Tolerance -0 to + 0.4 mm (-0 to +1/64 in)