The Timken Company
4500 Mt Pleasant St. NW
N. Canton, OH 44720
Phone: (234) 262-3000
E-Mail: CustomerCAD@timken.com • **Web site:** www.timken.com

Timken Part Number 23324EMW33W800C4, Spherical Roller Bearings - Brass Cage

Spherical bearings are designed to manage high radial loads even when misalignment, poor lubrication, contamination, extreme speeds or critical application stresses are present.



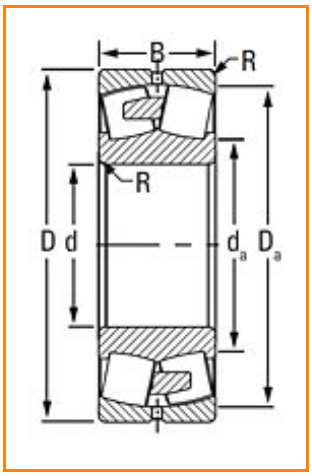

Specifications | Dimensions | Abutment and Fillet Dimensions | Basic Load Ratings | Factors

Specifications

Design Unit	METRIC
Bearing Weight	27.80 Kg 61.20 lb
Cage Type	EM
UPC Code	87796031890
Cage Material	BRASS
Superseded Part	23324YMW33W800C4

Dimensions

d - Bore	120.000 mm 4.7244 in
D - Outer Diameter	259.993 mm 10.2359 in
B' - Inner Ring Width	106 mm 4.1732 in
B - Outer Ring Width	106.000 mm 4.1732 in

Abutment and Fillet Dimensions

R - Inner Ring "To Clear" Radius[1]	2.500 mm 0.100 in
r - Outer Ring "To Clear" Radius[2]	2.500 mm 0.100 in
da - Inner Ring Backing Diameter	147.000 mm 5.800 in
Da - Outer Ring Backing Diameter	226.000 mm 8.900 in

Basic Load Ratings

C0 - Static Radial Rating	1410000 N 318000 lbf
C1(2) - Dynamic Radial Rating (Two-Rows)	1230000 N 276000 lbf

Factors

e - ISO Factor[3]	0.43
Y0 - ISO Factor[4]	1.57

Y1 - ISO Factor[5]	2.34
Y2 - ISO Factor[6]	1.54
Reference Thermal Speed Rating (Grease)	1400
Reference Thermal Speed Rating (Oil)[7]	1500
Cg - Geometry Factor[8]	0.0819

[1] Maximum housing fillet radius that bearing corners will clear.

[2] Maximum shaft fillet radius that bearing corners will clear.

[3] These factors apply for both inch and metric calculations. Consult your Timken representative for instruction on use.

[4] These factors apply for both inch and metric calculations. See engineering

[5] These factors apply for both inch and metric calculations. Consult your Timken representative for instruction on use.

[6] These factors apply for both inch and metric calculations. Consult your Timken representative for instruction on use.

[7] See thermal speed ratings in the engineering section.

[8] Geometry constant for Lubrication Life Adjustment Factor a3l.

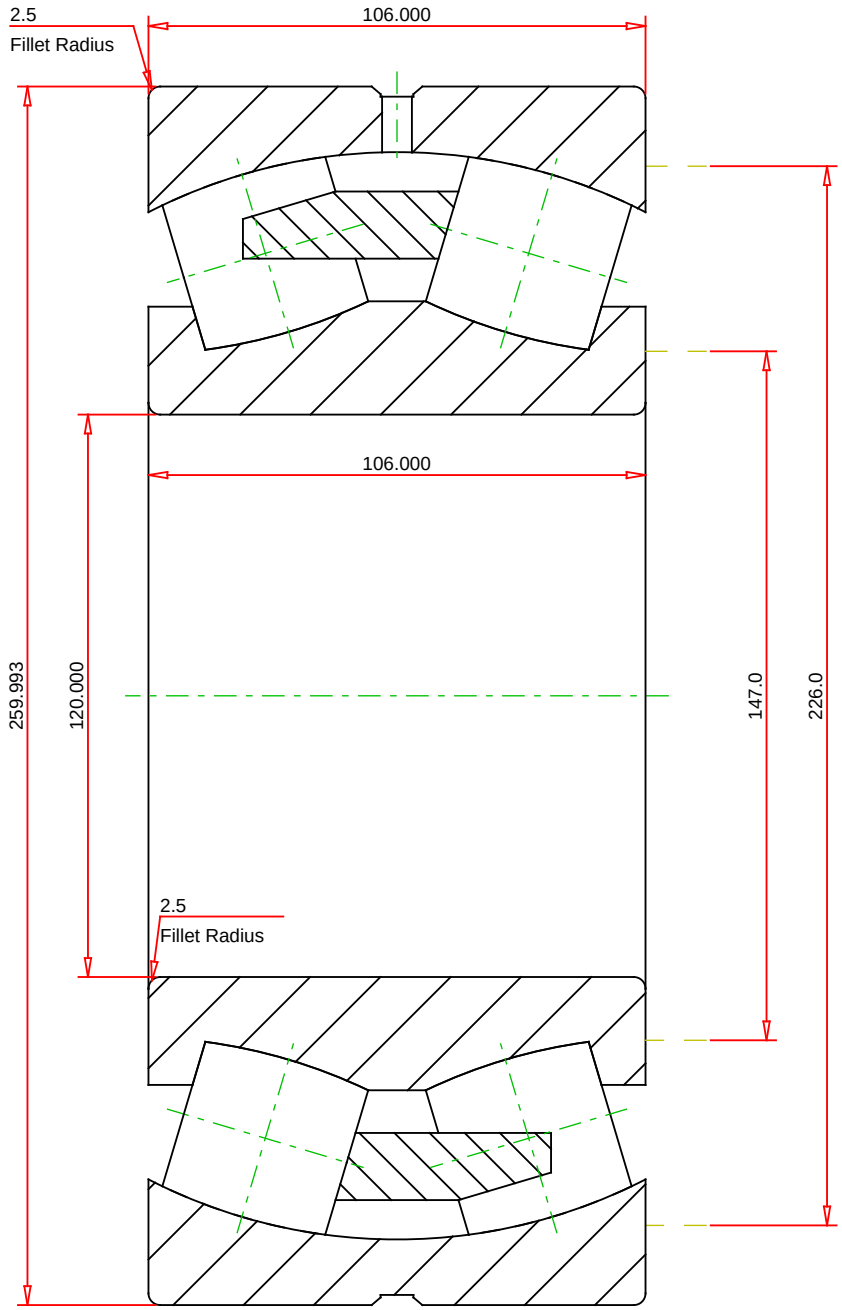

METRIC UNITS

Number of Rollers Per Row	15	
ISO Factor e	0.43	
ISO Factor Y0	1.57	
ISO Factor Y1	2.34	
ISO Factor Y2	1.54	
Bearing Weight	27.8	kg
Cage Type	EM	
Cage Material	BRASS	

TIMKEN®

THE TIMKEN COMPANY
NORTH CANTON, OHIO USA

23324EMW33W800C4
SRB ASSEMBLY

Dynamic Radial Rating (Two Rows)	1230000	N
Static Radial Rating	1410000	N

Every reasonable effort has been made to ensure the accuracy of the information contained in this writing, but no liability is accepted for errors, omissions or for any other reason.

FOR DISCUSSION ONLY