The Timken Company
4500 Mt Pleasant St. NW
N. Canton, OH 44720
Phone: (234) 262-3000
E-Mail: CustomerCAD@timken.com • **Web site:** www.timken.com

Timken Part Number E-4BF-TRB-2, Type E Flange: 4-Bolt Bearing

Type E tapered roller bearing housed units are available in a wide variety of sizes and configurations to meet the requirements of demanding applications. Popular part numbers are in stock for immediate availability. Metric sizes also are available in shaft diameters ranging from 35 mm to 125 mm.



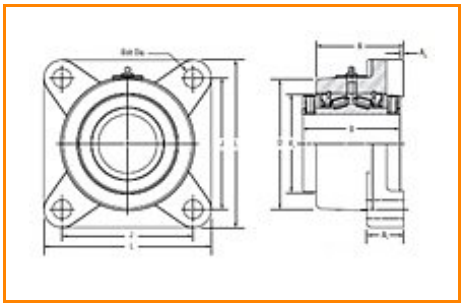

Specifications | Dimensions | Radial and Thrust Factors; Speed and Slip-Fit Load Limits | Note

Specifications

Shaft Size	2 in
Shaft Size Type	Imperial
Weight	12 lb
UPC Code	053893537115

Dimensions

Dimension B	3-1/2 in
Dimension L	5-5/8 in
Dimension A	3-3/32 in
Dimension J	4-3/8 in

Dimension A_2	1/8 in
Bolt Diameter	1/2 in
Dimension A_1	1-3/16 in
Dimension D [1]	4-7/16 in
Dimension d_1	3-7/16 in

Radial and Thrust Factors; Speed and Slip-Fit Load Limits

e	0.33
X (if $F_a/F_r \leq e$)	0.87
Y (if $F_a/F_r \leq e$)	2.64
X (if $F_a/F_r > e$)	0.7
Y (if $F_a/F_r > e$)	3.18
K Factor	1.83
C_{90} Dynamic Load Rating[2]	10300 lb
C_0 Static Load Rating	43000 lb
$F_{a\text{-}max}$ Maximum Permissible Thrust Load[3]	2590 lb
$F_{r\text{-}max}$ Maximum Allowable Slip Fit Radial Load[4]	8400 lb
Max. Speed[5]	3050 rpm

Note

Note: All units have a 1/8" pipe thread grease fitting

The Maximum Permissible Thrust Load applies to conditions of slip fit with set screw mounting or in applications where a large moment loading occurs. The values shown are valid only when two collars and set screws are used.

When heavy thrust forces are applied, the friction between the pillow block base may not be sufficient to prevent movement. Mechanical stops or shear bars with strength sufficient to support the load should be added. Never weld the pillow block or bearing to secure it to the shaft or base.

[1] Tolerance +.000 /-.002 in

[2] C_{90} is the Dynamic Load Rating based on a rated Life of 90 million revolutions (3000 hrs at 500 RPM).

[3] $F_{a\text{-}max}$ is based on the limits of the holding force of two properly tightened collars and set screws. Fifty percent of the values should be used when a single collar is installed.

[4] If the application loads approach or exceed $F_{r\text{-}max}$, the shaft fit should be adjusted to a line-to-line (g6 or h6) or light press fit (m6).

[5] Timken Double Lip Seal

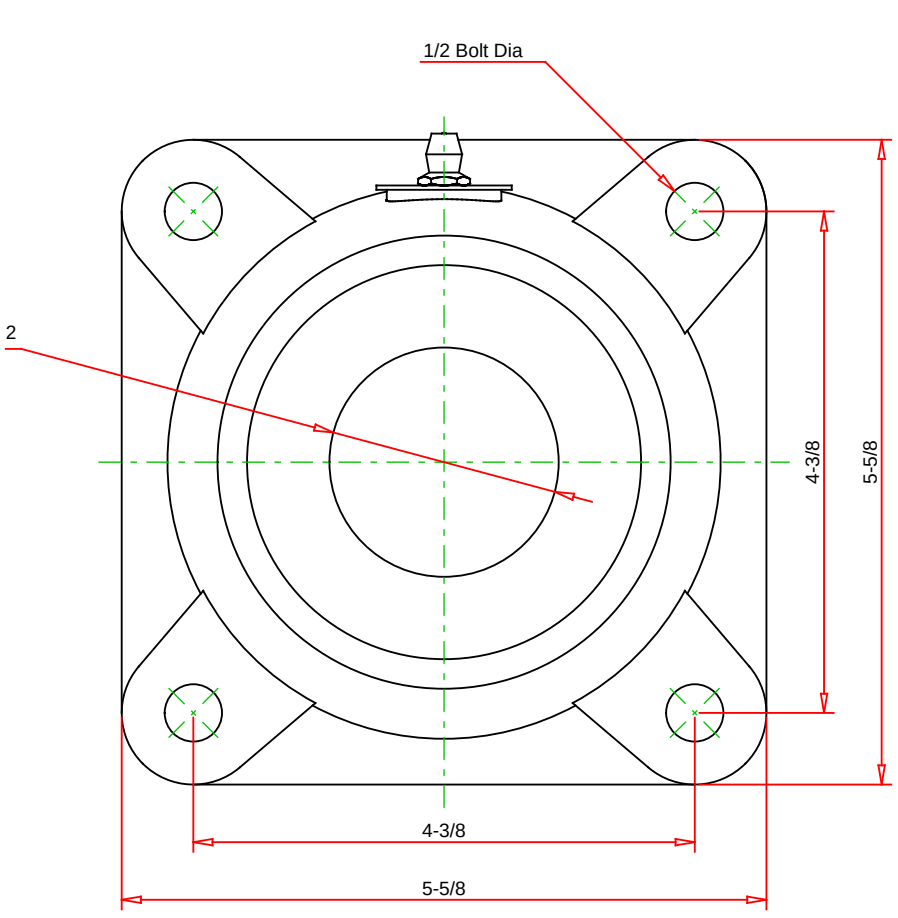

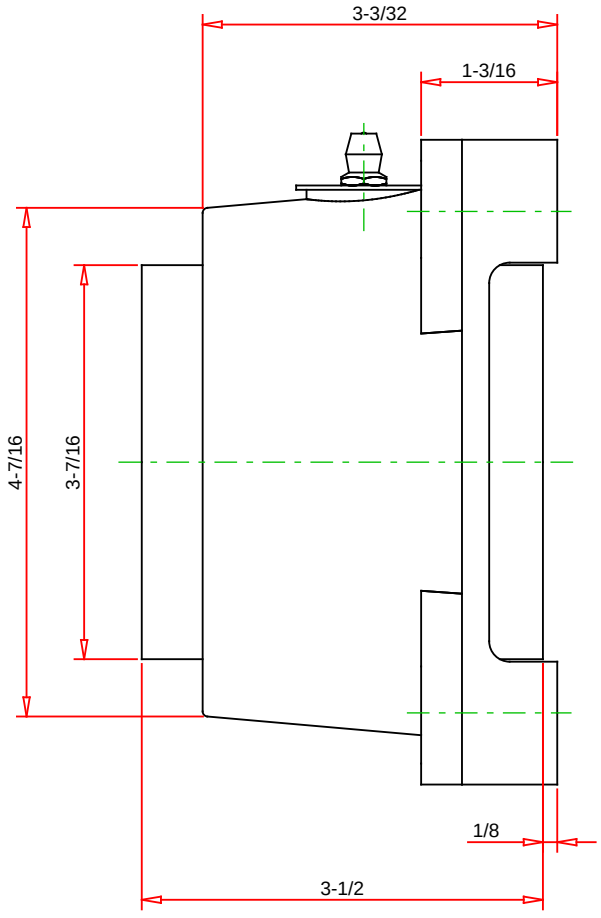

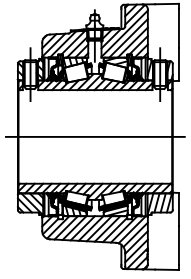

Note: Section View not to Scale

IMPERIAL UNITS

C90	10300	LBS
Co	43000	LBS
Fa-MAX	2590	LBS
Fr-MAX	8400	LBS
MAX SPEED	3050	RPM

TIMKEN

THE TIMKEN COMPANY
NORTH CANTON, OHIO USA

E-4BF-TRB-2

FLANGE: 4-BOLT

Every reasonable effort has been made to ensure the accuracy of the information contained in this writing, but no liability is accepted for errors, omissions or for any other reason.

FOR DISCUSSION ONLY