The Timken Company
4500 Mt Pleasant St. NW
N. Canton, OH 44720
Phone: (234) 262-3000
E-Mail: CustomerCAD@timken.com • **Web site:** www.timken.com

Timken Part Number LM11949 - LM11910, Tapered Roller Bearings - TS (Tapered Single) Imperial

This is the most basic and most widely used type of tapered roller bearing. It consists of two main separable parts: the cone (inner ring) assembly and the cup (outer ring). It is typically mounted in opposing pairs on a shaft.



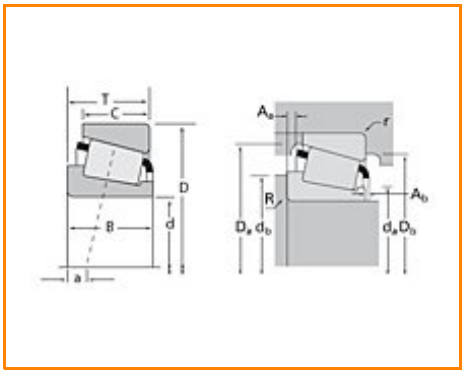

Specifications | Dimensions | Abutment and Fillet Dimensions | Basic Load Ratings | Factors

Specifications

Series	LM11900
Cone Part Number	LM11949
Cup Part Number	LM11910
Design Units	Imperial
Bearing Weight	0.100 Kg 0.30 lb
Cage Type	Stamped Steel

Dimensions

d - Bore	19.050 mm 0.7500 in
D - Cup Outer Diameter	45.237 mm 1.7810 in
B - Cone Width	16.637 mm 0.6550 in
C - Cup Width	12.065 mm 0.4750 in
T - Bearing Width	15.494 mm 0.6100 in

Abutment and Fillet Dimensions

R - Cone Backface "To Clear" Radius[1]	1.270 mm 0.050 in
r - Cup Backface "To Clear" Radius[2]	1.27 mm 0.050 in
da - Cone Frontface Backing Diameter	23.62 mm 0.93 in
db - Cone Backface Backing Diameter	24.89 mm 0.98 in
Da - Cup Frontface Backing Diameter	41.90 mm 1.65 in
Db - Cup Backface Backing Diameter	39.62 mm 1.56 in
Ab - Cage-Cone Frontface Clearance	1.3 mm 0.05 in
Aa - Cage-Cone Backface Clearance	-0.3 mm -0.01 in
a - Effective Center Location[3]	-5.60 mm -0.22 in

Basic Load Ratings

C90 - Dynamic Radial Rating (90 million revolutions)[4]	10100 N 2280 lbf
C1 - Dynamic Radial Rating (1 million revolutions)[5]	39100 N 8800 lbf
C0 - Static Radial Rating	32000 N 7200 lbf
C_{a90} - Dynamic Thrust Rating (90 million revolutions)[6]	5220 N 1170 lbf

Factors

K - Factor[7]	1.94
e - ISO Factor[8]	0.3
Y - ISO Factor[9]	2
G1 - Heat Generation Factor (Roller-Raceway)	6.6
G2 - Heat Generation Factor (Rib-Roller End)	5.49
Cg - Geometry Factor	0.0441

[1] These maximum fillet radii will be cleared by the bearing corners.

[2] These maximum fillet radii will be cleared by the bearing corners.

[3] Negative value indicates effective center inside cone backface.

[4] Based on 90 x 10^6 revolutions L_{10} life, for The Timken Company life calculation method. C_{90} and C_{a90} are radial and thrust values.

[5] Based on 1 x 10^6 revolutions L_{10} life, for the ISO life calculation method.

[6] Based on 90 x 10^6 revolutions L_{10} life, for The Timken Company life calculation method. C_{90} and C_{a90} are radial and thrust values for a single-row, $C_{90(2)}$ is the two-row radial value.

[7] These factors apply for both inch and metric calculations. Consult your Timken representative for instruction on use.

[8] These factors apply for both inch and metric calculations. Consult your Timken representative for instruction

on use.

[9] These factors apply for both inch and metric calculations. Consult your Timken representative for instruction on use.

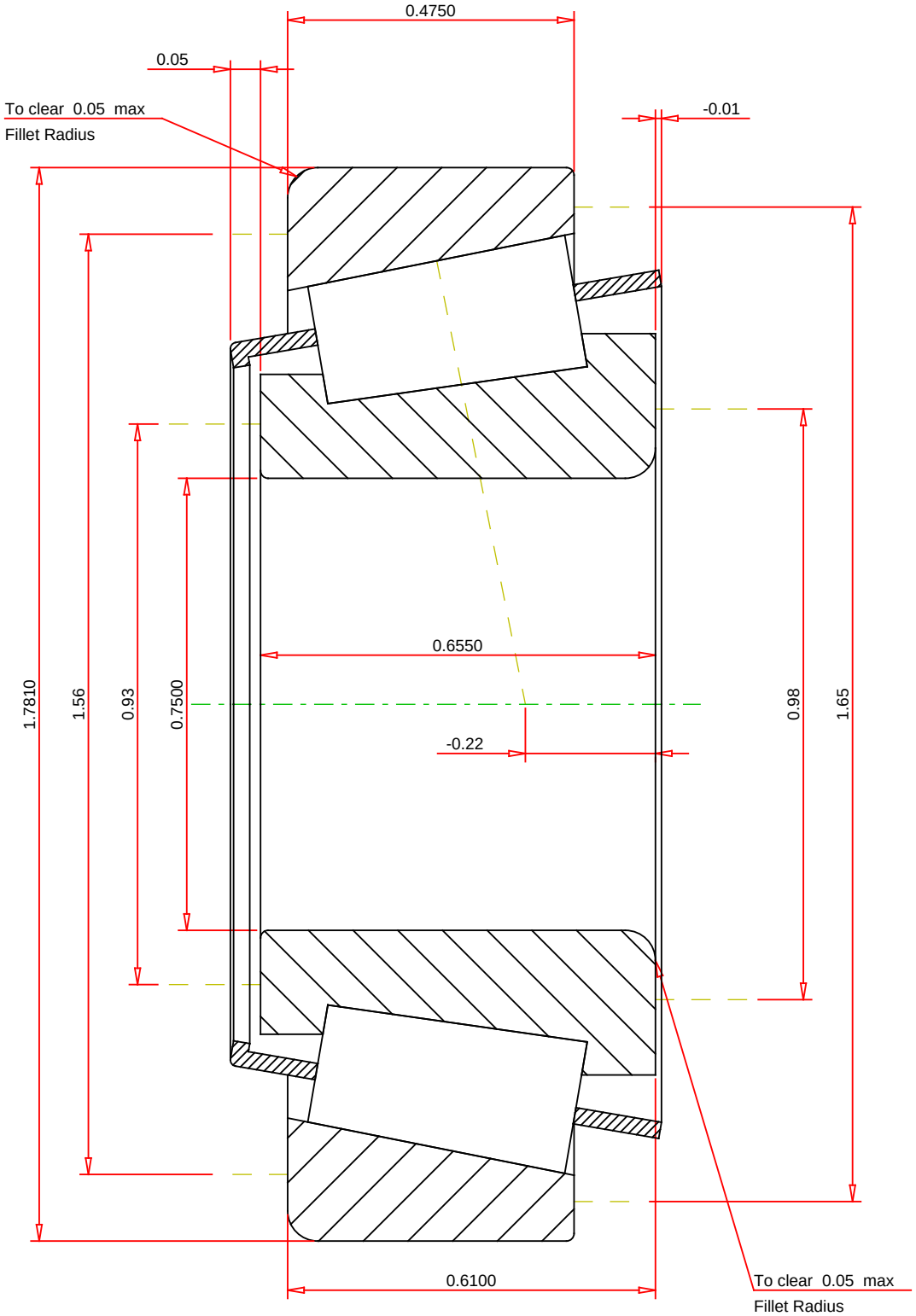

IMPERIAL UNITS

ISO Factor - e	0.3	
ISO Factor - Y	2	
Bearing Weight	0.3	lb
Number of Rollers Per Row	14	
Effective Center Location	-0.22	inch

TIMKEN®

THE TIMKEN COMPANY
NORTH CANTON, OHIO USA

LM11949 - LM11910
TS BEARING ASSEMBLY

K Factor	1.94	
Dynamic Radial Rating - C90	10100	lbf
Dynamic Thrust Rating - Ca90	5220	lbf
Static Radial Rating - C0	32000	lbf
Dynamic Radial Rating - C1	39100	lbf

Every reasonable effort has been made to ensure the accuracy of the information contained in this writing, but no liability is accepted for errors, omissions or for any other reason.

FOR DISCUSSION ONLY