The Timken Company
4500 Mt Pleasant St. NW
N. Canton, OH 44720
Phone: (234) 262-3000
E-Mail: CustomerCAD@timken.com • **Web site:** www.timken.com

Timken Part Number M274149 - M274110, Tapered Roller Bearings - TS (Tapered Single) Imperial

This is the most basic and most widely used type of tapered roller bearing. It consists of two main separable parts: the cone (inner ring) assembly and the cup (outer ring). It is typically mounted in opposing pairs on a shaft.



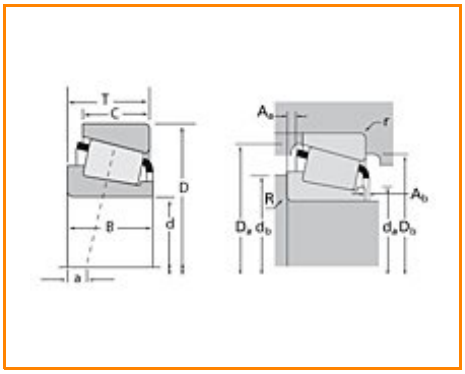

Specifications | Dimensions | Abutment and Fillet Dimensions | Basic Load Ratings | Factors

Specifications

Series	M274100
Cone Part Number	M274149
Cup Part Number	M274110
Design Units	Imperial
Bearing Weight	170.700 Kg 376.30 lb
Cage Type	Pin-Type

Dimensions

d - Bore	501.650 mm 19.7500 in
D - Cup Outer Diameter	711.200 mm 28.0000 in
B - Cone Width	136.525 mm 5.3750 in
C - Cup Width	106.363 mm 4.1875 in
T - Bearing Width	136.525 mm 5.3750 in

Abutment and Fillet Dimensions

R - Cone Backface "To Clear" Radius[1]	6.35 mm 0.25 in
r - Cup Backface "To Clear" Radius[2]	6.35 mm 0.250 in
da - Cone Frontface Backing Diameter	533.91 mm 25.16 in
db - Cone Backface Backing Diameter	540.00 mm 21.26 in
Da - Cup Frontface Backing Diameter	680.47 mm 26.79 in
Db - Cup Backface Backing Diameter	662.94 mm 26.10 in
Ab - Cage-Cone Frontface Clearance	10.2 mm 0.4 in
Aa - Cage-Cone Backface Clearance	10.4 mm 0.41 in
a - Effective Center Location[3]	-10.70 mm -0.42 in

Basic Load Ratings

C90 - Dynamic Radial Rating (90 million revolutions)[4]	916000 N 206000 lbf
C1 - Dynamic Radial Rating (1 million revolutions)[5]	3530000 N 794000 lbf
C0 - Static Radial Rating	8070000 N 1820000 lbf
C_{a90} - Dynamic Thrust Rating (90 million revolutions)[6]	521000 N 117000 lbf

Factors

K - Factor[7]	1.76
e - ISO Factor[8]	0.33
Y - ISO Factor[9]	1.8
G1 - Heat Generation Factor (Roller-Raceway)	9020
G2 - Heat Generation Factor (Rib-Roller End)	560.7
Cg - Geometry Factor	0.269

[1] These maximum fillet radii will be cleared by the bearing corners.

[2] These maximum fillet radii will be cleared by the bearing corners.

[3] Negative value indicates effective center inside cone backface.

[4] Based on 90 x 10^6 revolutions L_{10} life, for The Timken Company life calculation method. C_{90} and C_{a90} are radial and thrust values.

[5] Based on 1 x 10^6 revolutions L_{10} life, for the ISO life calculation method.

[6] Based on 90 x 10^6 revolutions L_{10} life, for The Timken Company life calculation method. C_{90} and C_{a90} are radial and thrust values for a single-row, $C_{90(2)}$ is the two-row radial value.

[7] These factors apply for both inch and metric calculations. Consult your Timken representative for instruction on use.

[8] These factors apply for both inch and metric calculations. Consult your Timken representative for instruction

on use.

[9] These factors apply for both inch and metric calculations. Consult your Timken representative for instruction on use.

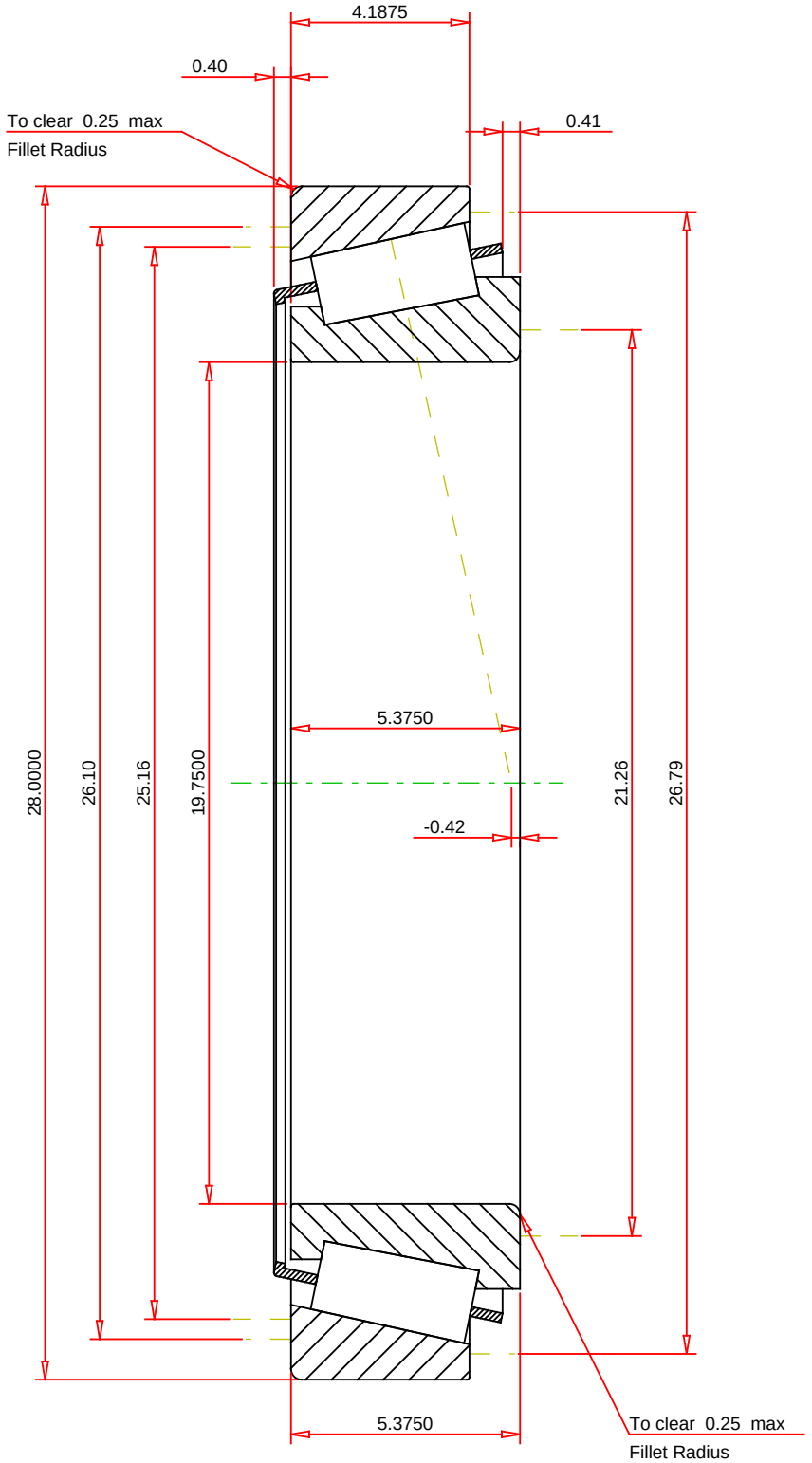

IMPERIAL UNITS

ISO Factor - e	0.33	
ISO Factor - Y	1.8	
Bearing Weight	376.3	lb
Number of Rollers Per Row	36	
Effective Center Location	-0.42	inch

TIMKEN

THE TIMKEN COMPANY
NORTH CANTON, OHIO USA

M274149 - M274110
TS BEARING ASSEMBLY

K Factor	1.76	
Dynamic Radial Rating - C90	916000	lbf
Dynamic Thrust Rating - Ca90	521000	lbf
Static Radial Rating - C0	8070000	lbf
Dynamic Radial Rating - C1	3530000	lbf

Every reasonable effort has been made to ensure the accuracy of the information contained in this writing, but no liability is accepted for errors, omissions or for any other reason.

FOR DISCUSSION ONLY