The Timken Company
4500 Mt Pleasant St. NW
N. Canton, OH 44720
Phone: (234) 262-3000
E-Mail: CustomerCAD@timken.com • **Web site:** www.timken.com

Part Number GYE55KRRB SGT, Fafnir® Wide Inner Ring Setscrew Locking Ball Bearings



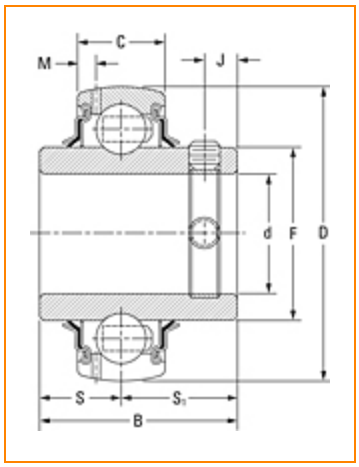

Specifications | Dimensions | Basic Load Ratings

Specifications

Shaft Size d	2.165 in 55 mm
Bore Type	Cylindrical bore
Bearing Type	Ball Bearing
Material	Bearing Steel
Lubrication Type	Relubricatable
O.D. Type	Spherical OD
Dimension M	0.197 in 5 mm
Series	Industrial
Weight	0.50 lb 0.2 Kg

Sub Series	GYE..KRRB SGT
Alternate Part Name	GYE55KRRBSGT
Seal Type	Shroud Seal

Dimensions

Outside Diameter D	3.937 in 100.000 mm
Inner Ring Width B	55.55 mm 2.187 in
Outside Ring Width C	24.000 mm 0.945 in
Radius r	0.6 mm 0.024 in
Center of Bearing from End S	22.22 mm 0.875 in
Dimension S1	33.32 mm 1.312 in
Set Screw Distance S2	10.00 mm 0.394 in
Set Screw Size	M10x1.5
Number of Set Screws	2
Angle between Set Screws	90 °

Basic Load Ratings

Static Load Rating	6570 lbf 29200 N
Dynamic Load Rating	10800 lbf 48100 N

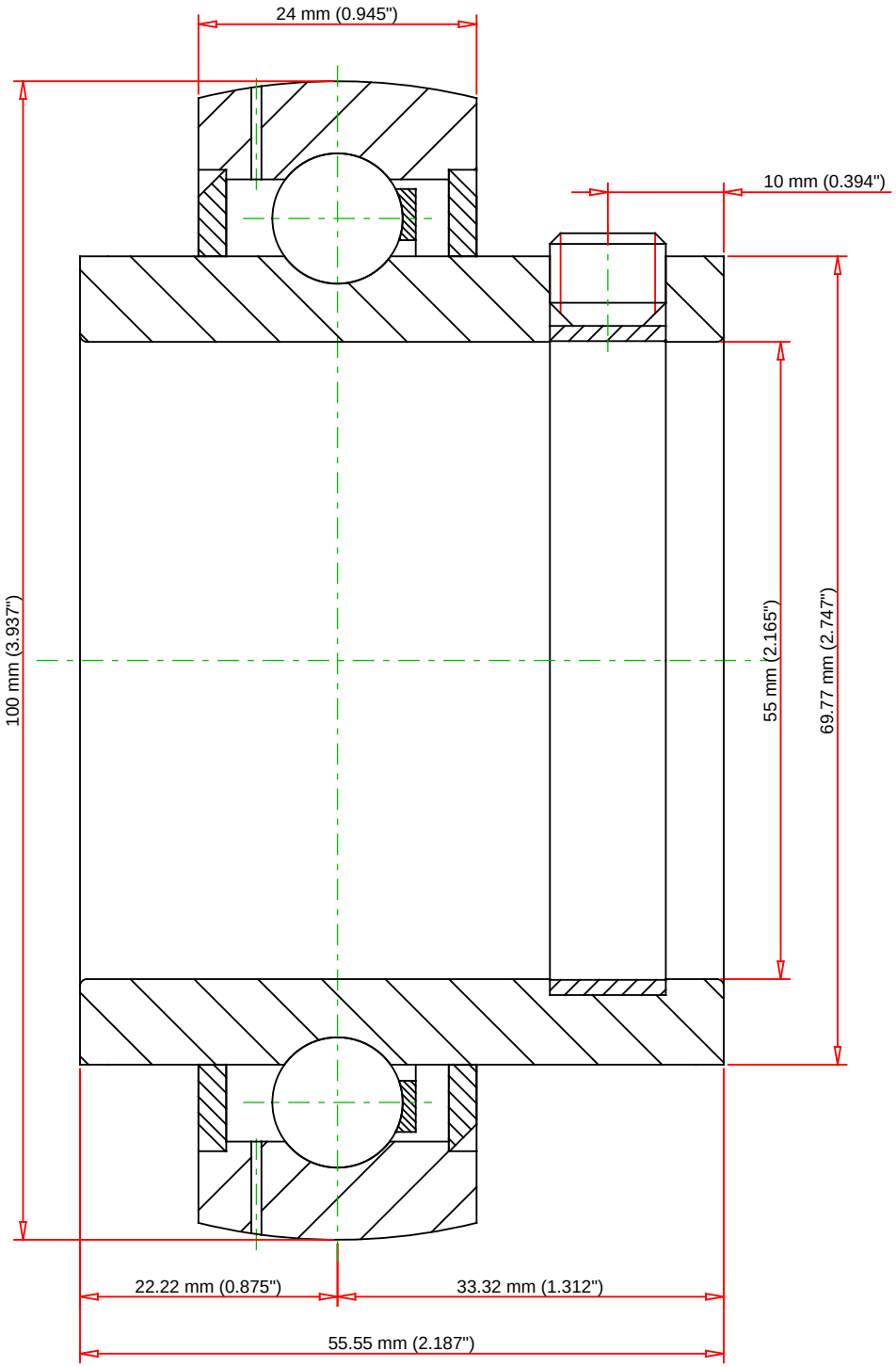

Weight	0.5 lb	0.2 kg

TIMKEN®

THE TIMKEN COMPANY
NORTH CANTON, OHIO USA

GYE55KRRB SGT

Fafnir® Wide Inner Ring Setscrew Locking Ball Bearings

Basic Load Ratings - C_r	10800 lbf	48000 N
Load Ratings - C_{0r}	6400 lbf	28500 N

Every reasonable effort has been made to ensure the accuracy of the information contained in this writing, but no liability is accepted for errors, omissions or for any other reason.

FOR DISCUSSION ONLY