TIMKEN®

Installation Guide

Timken®
Tapered Roller Bearing
Housed Units Installation and
Lubrication Instructions

INSTALLATION

1. Ensure that the shaft is clean, free from nicks and burrs, straight and of proper diameter. See Table 1 for recommended shaft tolerances. The bearing should not be mounted on a worn section of the shaft. Use of shafts with hardness greater than Rc 45 will reduce the effectiveness of locking devices.

2. Slide the unit into position on the shaft.

3. Install housing attachment bolts. Check housing alignment (Figure 1). Verify mounting surfaces are in the same flat plane to help make sure good alignment is achieved. If shimming is required to minimize misalignment, use full shims across entire housing base (Figure 2). The bolts then need to be alternately torqued securely to their mounting supports. Flat washers should be used when installing any kind of housed unit (Figure2). Washers should be properly sized to bolt diameter and should not be an SAE grade, which is smaller.

4. Ensure that the bearing insert can still be rotated.

5. Line up locking collars flush with the end of the cone (inner ring) face (Figure 3). Tighten set screws alternately as per Table 2. Set screws in multiple units should be aligned to each other (Figure 4).

LUBRICATION

This information is to aid in the proper lubrication of Timken tapered roller bearing housed units for the majority of applications.

Bearings have been factory prelubricated with Timken® Premium All Purpose Industrial Grease which is an NLGI No. 2 lithium complex based grease. This is suitable for normal operating conditions. Units should be relubricated with the Timken grease or one that is compatible and made for roller bearings. **It is vital that the greases used are compatible. Please consult with a Timken representative for the grease specifications if the use of a grease other than the Timken grease mentioned above is needed.**

Normal service is considered as operation in a clean, dry environment at temperatures between -34° C to +82° C (-30° F and +180° F). If service is beyond normal conditions due to speed, temperature, or exposure to moisture, dirt or corrosive chemicals, periodic relubrication may be advisable. For extreme conditions or conditions in which special chemicals are used, a Timken representative should be consulted.

After extended storage or periods when the unit is not in operation, fresh grease should be added.

For units operating in dirty or wet environments, the bearing should contain as much grease as possible, based on the shaft speed, to help protect against contamination. For slower applications, with shaft speeds typically less than 200 rpm, the unit should have grease added at start-up to fill the bearing.

Figure 1:

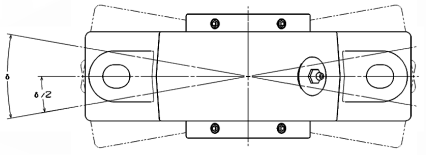

Align housing to 1/2 total angular movement

Figure 2:

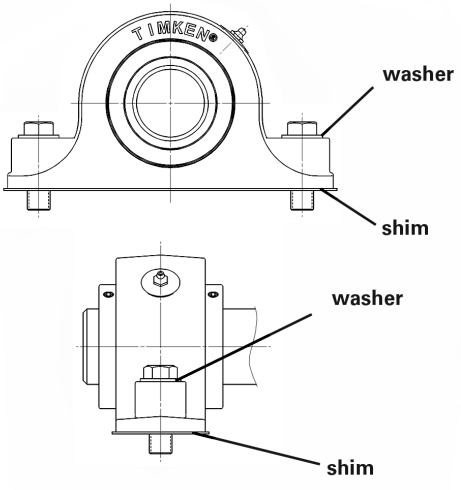

Use washers and full shims

Figure 3:

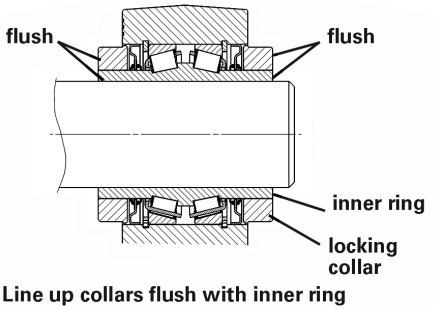

Line up collars flush with inner ring

Figure 4:

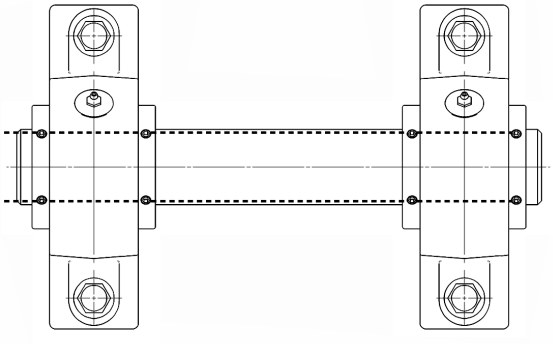

Line up set screws in multiple units

Lubrication affects the bearing operating temperature as well. If the bearing does not have enough grease, this could lead to higher temperature operation due to inadequate lubrication film thickness. Excessive grease will lead to higher operating temperatures due to grease churning. This can cause bearing overheating. To avoid this, it may be necessary to remove some of the grease inside the unit. The grease fitting may be removed briefly in this circumstance to allow excess grease to purge (the grease fitting must be replaced). It is best to observe the bearing and its temperature and adjust the lubrication as needed.

RELUBRICATION

Adequate lubrication is an essential element to the bearing life. Table 3, shown on reverse side, can be used as a suggested initial point of reference. Relubrication frequency and quantity intervals are best developed through experience for each application, based on types of service, which may differ from the suggestions in the table.

When the bearing is not in operation for an extended period of time, grease should be added to prevent corrosion.

The recommended shaft tolerances shown in Table 1 are for normal loaded applications. Please refer to the engineering section in the Timken Tapered Roller Bearing Housed Unit catalog to verify the maximum allowable slip fit radial load and to determine if a tighter fit is required. Table 3 shows general lubrication suggested starting points only. Please read the entire installation instructions prior to using these tables. Applications should be regularly reviewed and lubrication amounts and intervals modified as needed to assure best results.

Table 1

Recommended Shaft Tolerance	
Shaft Size	Tolerance
Up to 1-1/2" 35 mm	+0.0000" to –0.0005" +.000 mm to –.013 mm
1-5/8" to 4" 40 mm to 100 mm	+0.0000" to –0.0010" +.000 mm to –.025 mm
4 7/16" to 5" 110 mm to 125 mm	+0.0000" to –0.0015" +.000 mm to –.038 mm

Table 2

Recommended Set Screw Tightening Torque		
Shaft Size	Set Screw Size	Tightening Torque (in.-lbs)
1-3/16" to 1-11/16" 35 mm to 40 mm	5/16 - 18	155
1-3/4" to 2-1/2" 45 mm to 65 mm	3/8 - 16	275
2-11/16" to 3-1/2" 70 mm to 90 mm	1/2 - 13	615
3-15/16" to 5" 100 mm to 125 mm	5/8 - 11	1315

Table 3

Suggested Relubrication Intervals (Based on 8 Hours/Day Operation)									
Environment	Clean: Un-Exposed			Moderate: Exposed			Extreme: Harsh		
**Application Speed	Low	Med	Hi	Low	Med	Hi	Low	Med	Hi
Greasing Interval	1 year	2 months	2 weeks	1 month	2 weeks	*	1 week	1 week	*

*Use extra caution due to heat generation.
**(Low < 25% max rpm; 25%<Med<75%; 75%<Hi) - See Table 4 for max rpm values.
Relubriciation frequency and quantity are best developed through experience. And at all times, follow Original Equipment Manufacturer's maintenance instructions.

Table 4

Max RPM of Bearing	4490	3820	3320	3050	2730	2420	2060	1640	1530	1360	1200
Shaft Size	1-3/16" to 1-1/4"	1-3/8" to 1-7/16" 35 mm	1-1/2" to 1-11/16" 40 mm	1-3/4" to 2" 45 mm to 50 mm	2-3/16" 55 mm	2-1/4" to 2-1/2" 60 mm to 65 mm	2-11/16" to 3" 70 mm to 75 mm	3-3/16" to 3-1/2" 80 mm to 90 mm	3-15/16" to 4" 100 mm	4-7/16" to 4-1/2" 110 mm to 115 mm	4-15/16" to 5" 125 mm

⚠ WARNING

Failure to observe the following warnings could create a risk of death or serious injury.

Proper maintenance and handling practices are critical.
Always follow installation instructions and maintain proper lubrication.

Overheated bearings can ignite explosive atmospheres.
Special care must be taken to properly select, install, maintain, and lubricate housed unit bearings that are used in or near atmospheres that may contain explosive levels of combustible gases or accumulations of dust such from grain, coal, or other combustible materials. Consult your equipment designer or supplier for installation and maintenance instructions.

If hammer and bar are used for installation or removal of a part, use a mild steel bar (e.g., 1010 or 1020 grade). Mild steel bars are less likely to cause release of high-speed fragments from the hammer, bar or the part being removed.

CAUTION

Failure to follow these cautions may result in property damage.

Do not use damaged housed units.

NOTE

Do not use excessive force when mounting or dismounting the unit.

Follow all tolerance, fit, and torque recommendations.

Always follow the Original Equipment Manufacturer's installation and maintenance guidelines.

Ensure proper alignment.

Never weld housed units.

Do not heat components with an open flame.

Do not operate at bearing temperatures above 250˚F (121˚C).

TIMKEN

The Timken team applies their know-how to improve the reliability and performance of machinery in diverse markets worldwide. The company designs, makes and markets high-performance mechanical components, including bearings, gears, chain and related mechanical power transmission products and services.

www.timken.com

Stronger. **Commitment.** Stronger. **Value.** Stronger. **Worldwide.** Stronger. **Together.** | **Stronger.** By Design.

01-15 :29 Form No. T00202 Timken® is a registered trademark of The Timken Company. | © 2014 The Timken Company | Printed in U.S.A.